The highest ever energy classification for Electrolux Heat Pump Dryers, caring for our planet with this 8kg 10-star energy rating. Gently dry even the most delicate items. Gentle woollen care with energy efficiency.

Product Details

FEATURES

AUS 10E Star
With its exceptional 10-star rating, this dryer is designed to maximise energy efficiency and minimise costs.

Stainless Steel Drum
The stainless steel drum ensures fabric slides on its surface, not getting caught or causing tears.

Connectivity
Get Connected via the Electrolux app for better, more convenient clothes care.

SensiCare
SensiCare dynamically measures and adjusts the drying time to protect garments from over drying.

Hygiene
The Hygiene cycle dries while removing up to 99.9% of common bacteria and viruses.** Tested for Candida albicans, MS2 Bacteriophage and Escherichia coli in external test performed by Swissatest Testmaterialien AG in 2021 (Test Report No. 20212038).

Woolmark Green
Woolmark Green certifies energy efficiency during drying for gentle wool care

DelicateCare
DelicateCare perfectly cares for even your most delicate garments.

BENEFITS

STEEL DRUM FOR RELIABLE DRYING
The stainless steel drum ensures optimal reliability while tumble drying, ensuring fabrics slide on its surface and don't get caught or snagged causing tear. Treating all your garments with delicate care.

APP-CONNECTED CLOTHES CARE
Link your appliance to the Electrolux app to enjoy the ease of remote control. Get real-time status updates, resource-saving advice and garment care tips with Connected.

DRY AND PRESERVE YOUR CLOTHES

SensiCare measures the temperature and humidity within the drum and dynamically adjusts the time accordingly, so garments are protected from over drying.

REMOVES BACTERIA AND VIRUSES*

The Swissatest verified Hygiene cycle runs above 60°C, drying while sanitising items, removing up to 99.9% of common bacteria and viruses.* Now you can dry duvets, pillows and clothes with confidence.* Tested for Candida albicans, MS2 Bacteriophage and Escherichia coli in external test performed by Swissatest Testmaterialien AG in 2021 (Test Report No. 20212038).

EFFICIENT WOOLLEN CARE

Confidently dry your most precious woollen garments that are labelled machine or handwashable. Our Woolmark Green certified dryers meet specified criteria that protects wool fibers from damage during the drying - helping to preserve your woollens for longer . We have taken Wool care to the next level by pioneering eco-friendly and sustainable drying alongside gentle care with Woolmark Green certification

TAILORED DRYING FOR DELICATES

The DelicateCare Heat Pump Dryer adjusts the temperature and motion of the drum to specific fabrics, ensuring tailored care. Silks retain their shape, woollens resist shrinking and waterproofing is protected. Woolmark Blue certified.

10-STAR ENERGY EFFICIENCY

Delivering the highest ever energy rating for Electrolux, the 10-star UltimateCare Plus Tumble Dryer is designed to maximize energy efficiency and minimize your power bills. How? Heat pump technology recycles hot air to significantly decrease energy consumption. Improved airflow and insulation reduce heat loss, while moisture sensors and intuitive dryer software programs automatically adjust cycles to further optimize your energy usage.

Specifications

PRODUCT PROFILE

Domestic warranty details (yrs)	2
Dryer Type	heat pump
Capacity (Kg)	8
Wall mount option	no

DIMENSIONS

Total height (mm)	850
Total width (mm)	596
Total depth (mm)	659

ENERGY

Energy Star Rating New	10
Energy Efficiency Star Rating	10
Energy Consumption (KWhr/yr)	98

CONTROLS

Type of controls	electronic rotary,electronic touchscreen
Type of display	LCD
Fabric type selection	cotton,synthetics,wool,silk,delicate,normal

BUTTON FUNCTIONS

Functions	power/on/off,Extra Silent,Reverse Plus,End Alert,Extra Anticrease,Finish In

DRYING PROGRAMS

Drying Programs	Cotton,Synthetic,Delicate,Silk,Refresh,Duvet,Wool,Eco Cotton,Easy Iron,Drying Rack,Bedding+,Hygiene

DRYING PROGRAMS

Degree of dryness	extra,cupboard,iron dry

DRUM

Spin tub material	stainless steel

DOOR

Type	glass insert
Dryer Door colour	black

CABINET

Cabinet Colour	white
Cabinet material	painted galvanized steel

TECHNICAL

Dryer Lint filter position	front pocket
Dryer Element watts	0
Noise level dBA	63

SHIPPING

Shipping Weight (Kg)	58
Pack Dimensions Height (mm)	890
Pack Dimension Width (mm)	640

STUFFING QUANTITIES

40ft HC	147

SHIPPING

Pack Dimension Depth (mm)	700

Dimensions

Model:
EDH812R7WC

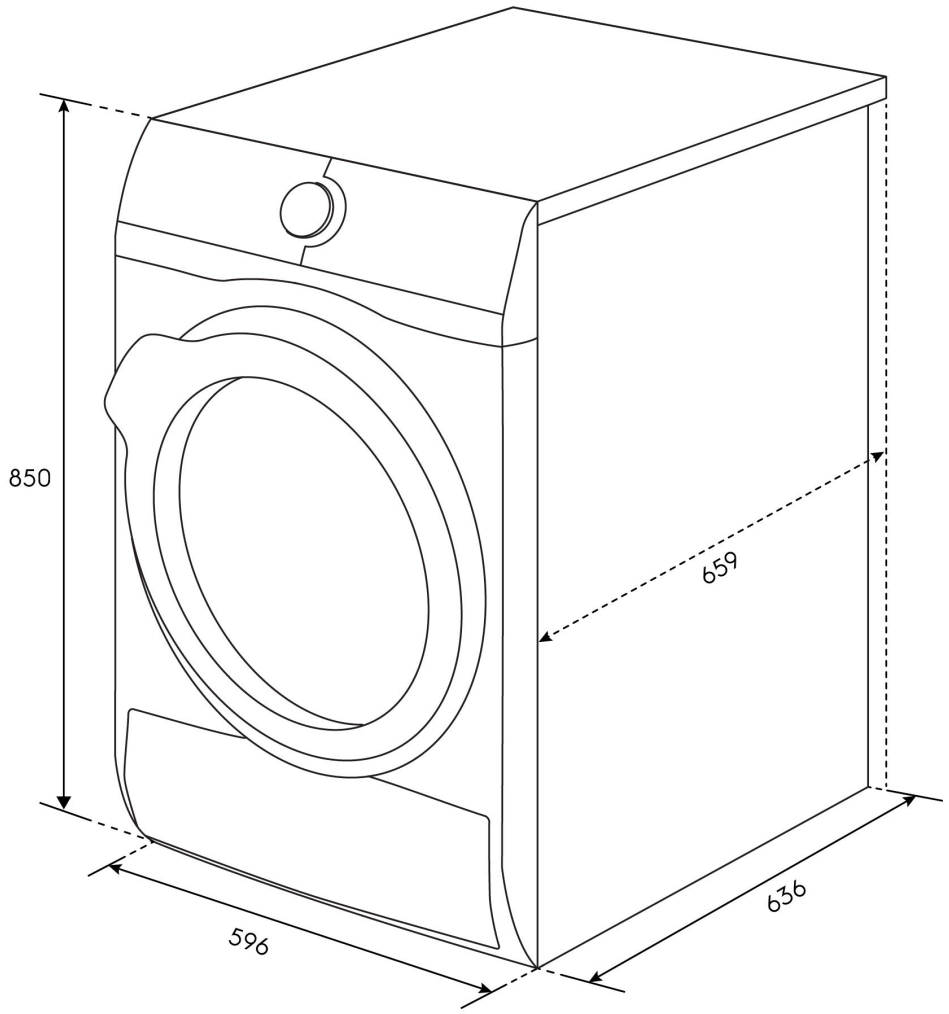

© 2025 Electrolux S.E.A PTE. LTD. ELX_IM_Diag_EDH812R7WC_Jan25

Terms and Conditions

IMPORTANT

This is a guide of product dimensions only. For complete installation instructions, refer to the manual provided with product.

PRODUCT INFORMATION

The descriptors and illustrations in this publication apply to the specific products and models described as at the date of issue. Under our policy of continuous productdevelopment, product specifications may change without notice. Prospective purchasers should therefore check with their retailer to ensure this publication correctly describes theproducts that are being offered for sale. All information supplied is to be used for general reference purposes only and is on the understanding that Electrolux Home Products PtyLtd (Australia) and Electrolux (NZ) Ltd (New Zealand) will not be liable for any loss, liability or damage of whatever kind arising as a result of reliance on such information. Colours ofproducts illustrated are as close as printing limitations allow. Electrolux will at all times comply with its obligations pursuant to law including Trade Practices (Australian Consumer Law) Act and Regulations.

WARRANTY

This warranty only applies to Appliances purchased and used in Australia or New Zealand and used in normal domestic applications and is in addition to (and does not exclude, restrict, or modify in any way) any non-excludable statutory warranties in Australia or New Zealand. All warranties are subject to the conditions set out in the warranty card accompanying the product when purchased.

ELECTROLUX HOME PRODUCTS AUSTRALIA
telephone: 1300 363 640
fax: 1800 350 067
email: customercare@electrolux.com.au
web: www.electrolux.com.au

ELECTROLUX HOME PRODUCTS NEW ZEALAND
telephone: 09 573 2230
fax: 09 573 2221
email: customercare@electrolux.co.nz
web: www.electrolux.co.nz