7.0kg vented tumble dryer comes with SensorDry technology to gently dry your garments for an exceptional result. Other features include fast timed programs, and anti-tangle reverse tumbling action.



Product Details

FEATURES

Large Capacity Drum
Large drum provides enough space to thoroughly dry bulky items and family-sized loads.

Fast Cycles
Dry your everyday 1kg loads within 30 mins.

ColourCare
ColourCare keeps the colours in your clothes looking like new for longer.

SensorDry
SensorDry gently and precisely dries your garments for exceptional results.

HygienicCare

Reverse Tumbling
Special alternating drum movements reduce wrinkles for quick and easy ironing.

BENEFITS

DRY WITH ADDED HYGIENE
The Swissatest-certified Hygiene cycle dries while removing more than 99.9% of common bacteria and viruses*.*Tested fro Candida albicans, MS2 Bacteriophage and Escherichia coli in external test performed by Swssatest Testmaterialien AG in 2021 (test Report No. 20242021).

FULL-SIZED DRYING
Large drum provides enough space to thoroughly dry bulky items and family-sized loads.

FAST DRY FOR SMALL LOADS
Select the 30 minutes cycle to dry 1kg of everyday cotton or blended fabrics fast. This programme is perfect for when you're in a hurry, drying smaller loads quickly and effectively.

COLOURS REMAIN AND STAYS
ColourCare keeps the colours in your clothes looking like new for longer. By using UltimateCare dryers, fabrics maintain their vibrancy for longer, so clothes always look and feel their best.

PRECISE DRYING MADE EASY
SensorDry gently and precisely dries your garments without overdrying, protecting your clothes while optimising time and energy.

LESS WRINKLES, EASY IRONING*
With Reverse Tumbling, alternating drum movements prevent clothes from tangling and reduce creasing and wrinkles to make ironing easier.*Less wrinkles vs. hang drying - tested and certified by THTI

Specifications

PRODUCT PROFILE

Domestic warranty details (yrs)	2
Dryer Type	vented
Design family (eline)	UC3
Capacity (Kg)	7
Wall mount option	supplied with unit

DIMENSIONS

Total height (mm)	795
Total width (mm)	600
Total depth (mm)	600

ENERGY

Energy Efficiency Star Rating	2
Energy Consumption (KWhr/yr)	315

CONTROLS

Type of controls	electronic rotary,Touch button
Type of display	LCD

BUTTON FUNCTIONS

Functions	power/on/off,Child Lock,Delay Start,Dry Temp - Low/Mid/High,Dryness Level,Extra Anticrease,Time Dry

DRYING PROGRAMS

Drying Programs	Delicate,Refresh,Eco Cotton,Bedding,Hygiene,Cotton Dry,Time Dry 30/60/90 Min,MixedDry Iron

DRYING PROGRAMS

Degree of dryness	extra,cupboard,iron dry
Venting	optional rear venting

DRUM

Spin tub material	stainless steel

DOOR

Type	glass insert
Dryer Door colour	white
Door safety	child lock

CABINET

Cabinet Colour	white
Cabinet material	painted galvanized steel

TECHNICAL

Dryer Lint filter position	front pocket
Buzzer	end of cycle
Dryer Element watts	2100
Noise level dBA	63

SHIPPING

Shipping Weight (Kg)	28.5

STUFFING QUANTITIES

40ft HC	171

SHIPPING

Pack Dimensions Height (mm)	845
Pack Dimension Width (mm)	625
Pack Dimension Depth (mm)	635

Dimensions

Model:
EDV705H3WC

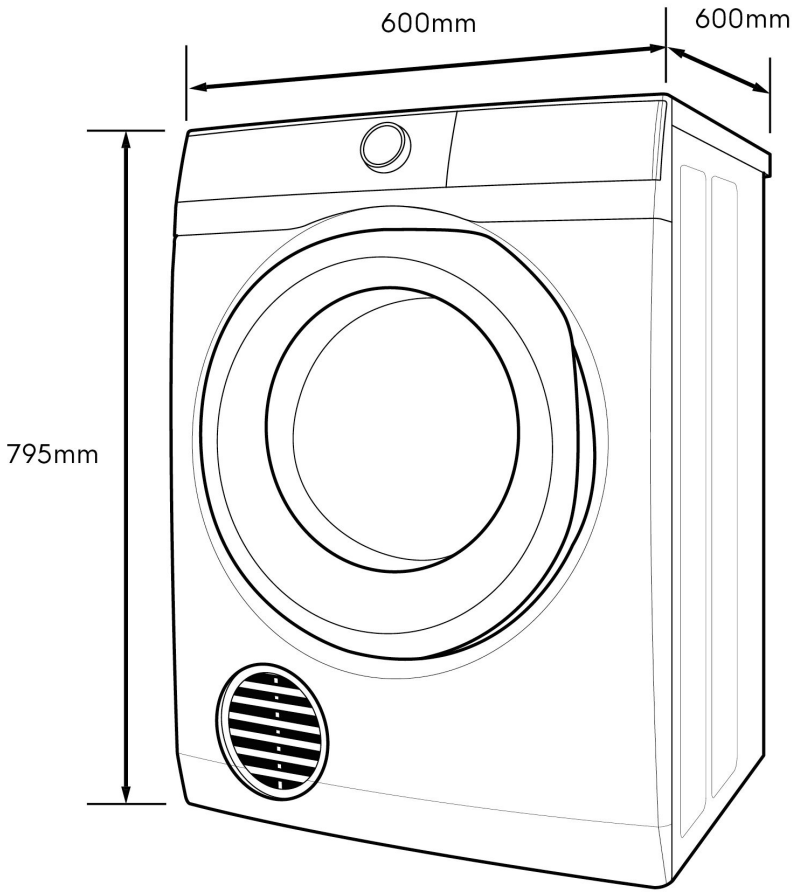

© 2024 Electrolux S.E.A PTE. LTD. ELX_IM_Diag_EDV705H3WC_ANZ_Jul24

Terms and Conditions

IMPORTANT

This is a guide of product dimensions only. For complete installation instructions, refer to the manual provided with product.

PRODUCT INFORMATION

The descriptors and illustrations in this publication apply to the specific products and models described as at the date of issue. Under our policy of continuous productdevelopment, product specifications may change without notice. Prospective purchasers should therefore check with their retailer to ensure this publication correctly describes theproducts that are being offered for sale. All information supplied is to be used for general reference purposes only and is on the understanding that Electrolux Home Products PtyLtd (Australia) and Electrolux (NZ) Ltd (New Zealand) will not be liable for any loss, liability or damage of whatever kind arising as a result of reliance on such information. Colours ofproducts illustrated are as close as printing limitations allow. Electrolux will at all times comply with its obligations pursuant to law including Trade Practices (Australian Consumer Law) Act and Regulations.

WARRANTY

This warranty only applies to Appliances purchased and used in Australia or New Zealand and used in normal domestic applications and is in addition to (and does not exclude, restrict, or modify in any way) any non-excludable statutory warranties in Australia or New Zealand. All warranties are subject to the conditions set out in the warranty card accompanying the product when purchased.

ELECTROLUX HOME PRODUCTS AUSTRALIA

telephone: 1300 363 640
fax: 1800 350 067
email: customercare@electrolux.com.au
web: www.electrolux.com.au

ELECTROLUX HOME PRODUCTS NEW ZEALAND

telephone: 09 573 2230
fax: 09 573 2221
email: customercare@electrolux.co.nz
web: www.electrolux.co.nz