60cm 4 burner black ceramic glass gas cooktop with 17MJ/hr wok burner, dual flame control and cast iron trivets

Product Details

FEATURES

Powerful 17 MJ/HR wok burner	Dual Flame control	Ceramic glass cooktop	Wok stand included
Metalised knob	One hand ignition	Flame Failure Safety Device	Stability with cast trivets
LP conversion kit included (must be installed by licensed tradesman)			

BENEFITS

3 YEAR WARRANTY
Because peace of mind should last as long as great design, this product has three years of trusted Electrolux support. *Available for purchases after 1 March 2026.

HIGH-POWERED HEAT
The powerful 17MJ wok burner provides the intense heat needed to lock in flavours and textures when stir-frying at high temperatures.

POWER AND CONTROL
Many top chefs prefer cooking with gas, finding easier to adjust to the subtle nuances of heat. With DualFlame, both the inner and outer burner flames can be adjusted. Choose the inner ring for gentle heating and simmering or add the power of the outer ring for intense stir frying, locking in crunch and flavour.

EASY CLEAN AND DURABLE
The flat ceramic glass surface not only makes it easier to clean burnt-on grease and grime to speed up the cleaning process after cooking but it is also very durable for added peace of mind.

STURDY AND STABLE
Sturdy cast iron supports ensure that your pots and pans are stable while cooking.

SAFETY SHUT-OFF
The flame failure safety device automatically cuts off the gas supply if the flame goes out during cooking. This means you can use your appliance at the lowest power without worrying about the flame extinguishing and leaking gas.

ONE-STEP IGNITION.
Ergonomically designed knobs with built-in electronic ignition means you can light the burners with only one step. Simply push down and turn the knob for an instant flame.

Specifications

PRODUCT PROFILE

Domestic warranty details (yrs)	3
Cooktop type	gas
Materials/Colour	black ceramic glass
Removable trim (for cleaning)	No
Wok included designed to fit cooktop	No
Knob Finish	Metalised dark finish

DIMENSIONS

Total product height (mm)	115
Total product width (mm)	595
Total product depth (mm)	530
Cut out width (mm)	560
Cut out depth (mm)	490
Cut out height (mm)	55

CONTROLS

Controls of Cooktops	knob
Position of controls	front
Features of Cooktop	flame failure,wok holder,Cast iron trivets,High powered, intense wok burner,Dual Valve Flame Control
Readable temperature setting	No

FEATURES

Trivets	cast iron
Ignition type	electronic

ELEMENTS/BURNERS

LEFT FRONT ZONE

Left front zone	dual valve wok
Left front Mj/h	17.0

LEFT REAR ZONE

Left rear zone	semi-rapid
Left rear Mj/h	9.0

RIGHT FRONT ZONE

Right front zone	simmer
Right front Mj/h	5.1

RIGHT REAR ZONE

Right rear zone	rapid
Right rear Mj/h	12.1

ELECTRICAL SPECIFICATIONS

Connected load KW	0.05
Type of connection	7.5 Amp plug & lead

GAS SPECIFICATIONS

Total burner output(NG)	43.2
Position of gas connection	rear left

SHIPPING

Shipping Volume (m3)	0.069
Shipping Weight (Kg)	15.4
Pack Dimensions Height (mm)	170

SHIPPING

Pack Dimension Width (mm)	685
Pack Dimension Depth (mm)	595

Dimensions

Model:
EHG645BE

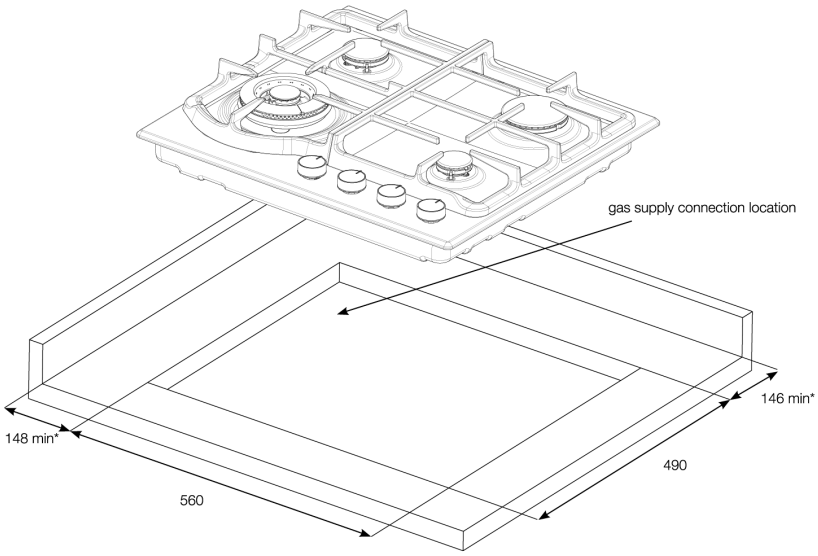

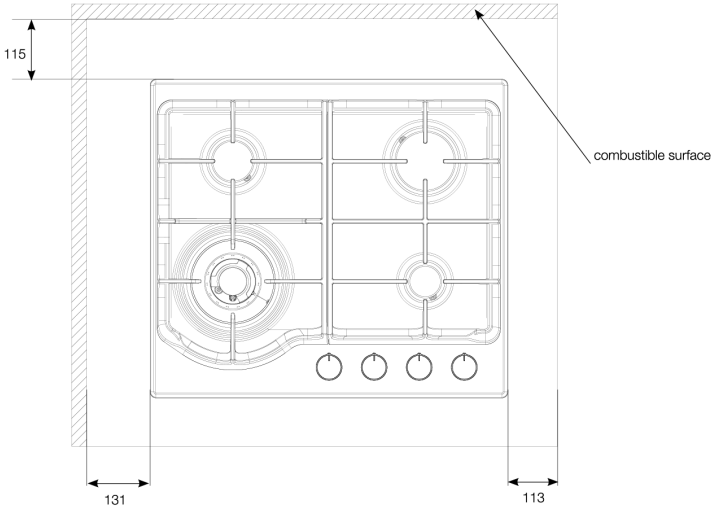

© 2021 Electrolux S.E.A PTE. LTD. E_DIM_EHG645BE_Sep21

Terms and Conditions

IMPORTANT

This is a guide of product dimensions only. For complete installation instructions, refer to the manual provided with product.

PRODUCT INFORMATION

The descriptors and illustrations in this publication apply to the specific products and models described as at the date of issue. Under our policy of continuous productdevelopment, product specifications may change without notice. Prospective purchasers should therefore check with their retailer to ensure this publication correctly describes theproducts that are being offered for sale. All information supplied is to be used for general reference purposes only and is on the understanding that Electrolux Home Products PtyLtd (Australia) and Electrolux (NZ) Ltd (New Zealand) will not be liable for any loss, liability or damage of whatever kind arising as a result of reliance on such information. Colours ofproducts illustrated are as close as printing limitations allow. Electrolux will at all times comply with its obligations pursuant to law including Trade Practices (Australian Consumer Law) Act and Regulations.

WARRANTY

This warranty only applies to Appliances purchased and used in Australia or New Zealand and used in normal domestic applications and is in addition to (and does not exclude, restrict, or modify in any way) any non-excludable statutory warranties in Australia or New Zealand. All warranties are subject to the conditions set out in the warranty card accompanying the product when purchased.

ELECTROLUX HOME PRODUCTS AUSTRALIA

telephone: 1300 363 640
fax: 1800 350 067
email: customercare@electrolux.com.au
web: www.electrolux.com.au

ELECTROLUX HOME PRODUCTS NEW ZEALAND

telephone: 09 573 2230
fax: 09 573 2221
email: customercare@electrolux.co.nz
web: www.electrolux.co.nz