30cm 2 zone induction cooktop with PowerBoost, Stop and Go function, and touch and slide control.
COMMERCIAL SALES EXCLUSIVE



Product Details

FEATURES

PowerBoost
PowerBoost gives you an intense heat boost to bring water to the boil quickly.

Stop + Go' pause function
Stop + Go' function sets zones to the lowest setting to keep dishes warm and prevent overcooking.

Auto pot detection
Pot detection sensors illuminate the controls that match the cooking zone.

Auto heat-up
Auto heat-up provides a boost of heat so you don't have to wait as long when you start cooking.

Timer
Timer automatically turns off the hob after cooking for extra peace-of-mind.

AutoOff
The AutoOff function will automatically shut off the hob if it detects that something is amiss.

Induction
Induction only heats directly beneath the pan, making it quick, easy-to-clean, efficient, and safe.

Power management
Power management redistributes the electrical load to prevent electrical outages.

BENEFITS

SEAR. STIR-FRY. BOIL.
The PowerBoost function gives you an intense heat boost when needed, before automatically dropping to the highest power level. Perfect for pan searing fish, stir-frying crunchy vegetables, or bringing water to the boil quickly.

ONE TOUCH TO PAUSE
The pause function is handy if you're suddenly interrupted or must leave the kitchen momentarily. At the touch of a button all cooking zones will be reduced to the lowest heat setting to ensure dishes stay warm, but dont overcook.

PLACE POT, ACTIVATE CONTROLS
Let the hob adapt your cooking style, not the other way around. Sensors automatically detect where you place pots on the cooking surface and illuminate the controls, making it easy for you to control each specific area.

BOOST TO GET STARTED
Don't have the time to wait for the water to boil? Then give it a boost to get going. After selecting the required setting, Auto heat-up boosts the power to get up to temperature faster, so that you can get cooking as quickly as possible.

IT'S ALL ABOUT TIMING
Do you sometimes forget to turn off the hob after cooking? You don't have to worry if you set the timer. When the time is out and you're done cooking, your hob will automatically shut off for extra peace-of-mind.

Specifications

PRODUCT PROFILE

Domestic warranty details (yrs)	2
Cooktop type	induction
Materials/Colour	black ceramic glass
Removable trim (for cleaning)	No
Wok included designed to fit cooktop	No

DIMENSIONS

Total product height (mm)	51
Total product width (mm)	300
Total product depth (mm)	520
Cut out width (mm)	270
Cut out depth (mm)	490

CONTROLS

Controls of Cooktops	Touch and Slide controls
Position of controls	front
Functions of Cooktops	timer,automatic switch off,stop and go,automatic warm up,Keep warm function,cooking timer with acoustic signal,PowerBoost
Indicators/display	fault indicator,3 level residual heat indicator

ELEMENTS/BURNERS

CENTRE FRONT ZONE

Centre front zone	induction
Centre front Watts	1400
Centre front diameter mm	140

CONTROLS

Features of Cooktop	minute minder,hot surface indicator,child safety device lock,safety cut off,overheating protection,electronic timer,function lock,auto pot sensors
Timer of Cooktop	programmable 99min,auto off,countdown,Minute minder

CENTRE REAR ZONE

Centre rear zone	induction
Centre rear Watts	2300
Centre rear diameter mm	210

ELECTRICAL SPECIFICATIONS

Connected load KW	3.65
Type of connection	hardwired

SHIPPING

Shipping Volume (m3)	0.0253
Shipping Weight (Kg)	6.5
Pack Dimensions Height (mm)	108
Pack Dimension Width (mm)	390

SHIPPING

Pack Dimension Depth (mm)	600

Dimensions

Model:
EHI321BEA

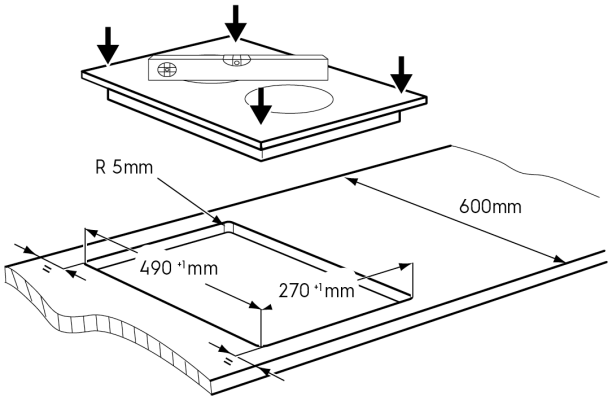

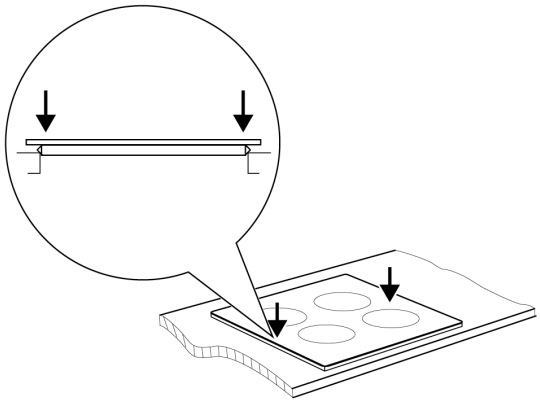

© 2021 Electrolux S.E.A PTE. LTD. E_DIM_EHI321BEA_Sep21

Terms and Conditions

IMPORTANT

This is a guide of product dimensions only. For complete installation instructions, refer to the manual provided with product.

PRODUCT INFORMATION

The descriptors and illustrations in this publication apply to the specific products and models described as at the date of issue. Under our policy of continuous productdevelopment, product specifications may change without notice. Prospective purchasers should therefore check with their retailer to ensure this publication correctly describes theproducts that are being offered for sale. All information supplied is to be used for general reference purposes only and is on the understanding that Electrolux Home Products PtyLtd (Australia) and Electrolux (NZ) Ltd (New Zealand) will not be liable for any loss, liability or damage of whatever kind arising as a result of reliance on such information. Colours ofproducts illustrated are as close as printing limitations allow. Electrolux will at all times comply with its obligations pursuant to law including Trade Practices (Australian Consumer Law) Act and Regulations.

WARRANTY

This warranty only applies to Appliances purchased and used in Australia or New Zealand and used in normal domestic applications and is in addition to (and does not exclude, restrict, or modify in any way) any non-excludable statutory warranties in Australia or New Zealand. All warranties are subject to the conditions set out in the warranty card accompanying the product when purchased.

ELECTROLUX HOME PRODUCTS AUSTRALIA

telephone: 1300 363 640
fax: 1800 350 067
email: customercare@electrolux.com.au
web: www.electrolux.com.au

ELECTROLUX HOME PRODUCTS NEW ZEALAND

telephone: 09 573 2230
fax: 09 573 2221
email: customercare@electrolux.co.nz
web: www.electrolux.co.nz