60cm 3 zone induction cooktop with SenseFry, MaxiZone, Bridge zone, and Hob2Hood capability

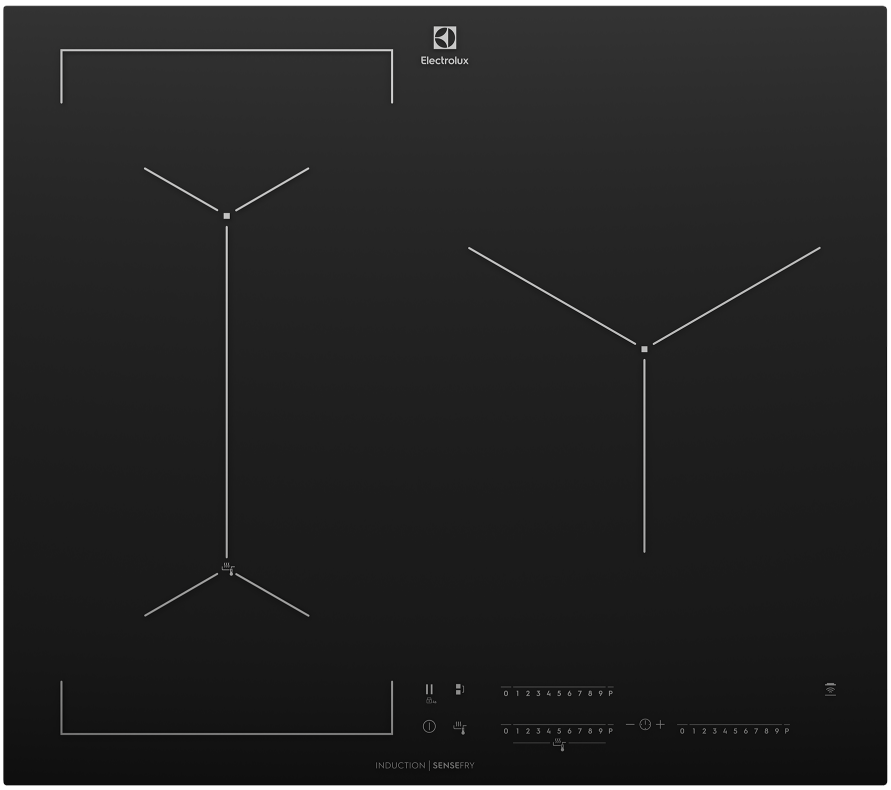

Product Details

FEATURES

SenseFry	MaxiZone	Bridge function	PowerBoost
Hob2Hood technology	STOP + GO function	Auto warm up function	Timer and minute minder
Auto pot detection	Child lock The child lock can be turned on to prevent children tampering with the electronic controls.		

BENEFITS

EVEN FRYING. AUTOMATICALLY.
SenseFry measures heat levels and makes automatic adjustments under the pan to maintain the ideal temperature for even cooking results. Now its easy for you to whip-up evenly browned pancakes and juicy steaks at home.

COMBINE ZONES FOR MORE FLAVOUR
The Bridge function allows you to combine two separate cooking zones to create a single large surface. With the temperature and time settings automatically aligned, its ideal for making the most of planchas or roasting pots.

SEAR. STIR-FRY. BOIL.
The PowerBoost function gives you an intense heat boost when needed, before automatically dropping to the highest power level. Perfect for pan searing fish, stir-frying crunchy vegetables, or bringing water to the boil quickly.

HANDS-FREE HOOD
Hob2Hood automatically switches on your extractor hood when you start cooking and adjusts the fan speed based on how you are using your hob. This means you can boil, sear or stir-fry without having to touch your hood with greasy fingers.

Enjoy the space and freedom to cook what you want
Use large pots and pans like a professional chef. The extra large MaxiZone on this hob gives you the freedom to effortlessly prepare all kinds of dishes that need a large pan with consistent heat, like that delicious paella youve been wanting to cook.

INTUITIVE TOUCH CONTROLS
Sensitive touch controls take you from simmering to boiling and back again, almost instantly. This controllability allows you to apply precise changes that can take your dishes from tasty to truly delicious. Pan-sear steak with intense heat, and then instantly drop the temperature down to protect that beautifully juicy, medium-rare texture.

Specifications

PRODUCT PROFILE

Domestic warranty details (yrs)	2
Cooktop type	induction
Materials/Colour	black ceramic glass
Removable trim (for cleaning)	No
Wok included designed to fit cooktop	No

DIMENSIONS

Total product height (mm)	55
Total product width (mm)	590
Total product depth (mm)	520
Cut out width (mm)	560
Cut out depth (mm)	490

CONTROLS

Controls of Cooktops	Touch and Slide controls
Position of controls	front
Functions of Cooktops	stop and go,automatic warm up,timer,Keep warm function,cooking timer with acoustic signal,automatic switch off,Hob2Hood,Bridging,MaxiZone,PowerBoost
Indicators/display	fault indicator,3 level residual heat indicator

ELEMENTS/BURNERS

LEFT FRONT ZONE

Left front zone	induction
Left front Watts	2300
Left front boost watts	3200

CONTROLS

Features of Cooktop	safety cut off,overheating protection,electronic timer,minute minder,function lock,hot surface indicator,auto pot sensors,child safety device lock,Bridge zone,SenseFry,MaxiZone,Hob2Hood
Timer of Cooktop	programmable 99min,auto off,countdown,Minute minder

LEFT REAR ZONE

Left rear zone	induction
Left rear watts	2300

RIGHT FRONT ZONE

Right front zone	MaxiZone
Right front Watts	3500

ELECTRICAL SPECIFICATIONS

Connected load KW	7.4
Maximum current rating (amps)	32
Type of connection	hardwired

SHIPPING

Shipping Volume (m3)	0.048
Shipping Weight (Kg)	12.2
Pack Dimensions Height (mm)	118
Pack Dimension Width (mm)	680
Pack Dimension Depth (mm)	600

Dimensions

Model:
EHI635BF

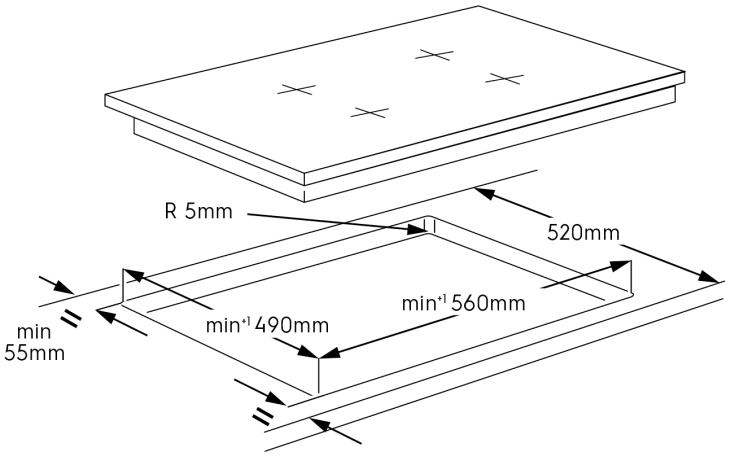

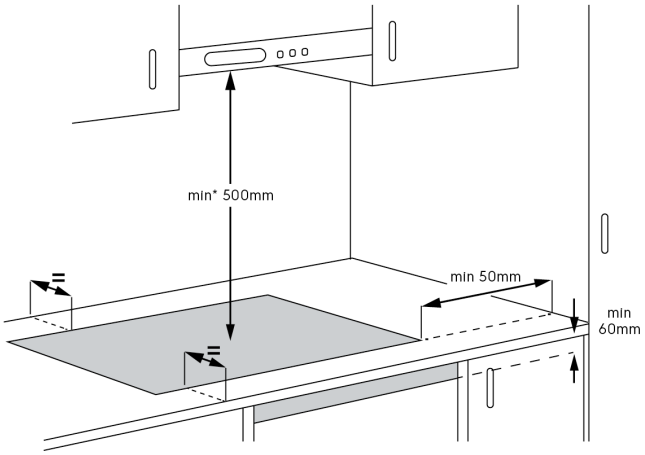

© 2024 Electrolux S.E.A PTE. LTD. ELX_DIM_EHI635BF_Jan24

Terms and Conditions

IMPORTANT

This is a guide of product dimensions only. For complete installation instructions, refer to the manual provided with product.

PRODUCT INFORMATION

The descriptors and illustrations in this publication apply to the specific products and models described as at the date of issue. Under our policy of continuous productdevelopment, product specifications may change without notice. Prospective purchasers should therefore check with their retailer to ensure this publication correctly describes theproducts that are being offered for sale. All information supplied is to be used for general reference purposes only and is on the understanding that Electrolux Home Products PtyLtd (Australia) and Electrolux (NZ) Ltd (New Zealand) will not be liable for any loss, liability or damage of whatever kind arising as a result of reliance on such information. Colours ofproducts illustrated are as close as printing limitations allow. Electrolux will at all times comply with its obligations pursuant to law including Trade Practices (Australian Consumer Law) Act and Regulations.

WARRANTY

This warranty only applies to Appliances purchased and used in Australia or New Zealand and used in normal domestic applications and is in addition to (and does not exclude, restrict, or modify in any way) any non-excludable statutory warranties in Australia or New Zealand. All warranties are subject to the conditions set out in the warranty card accompanying the product when purchased.

ELECTROLUX HOME PRODUCTS AUSTRALIA
telephone: 1300 363 640
fax: 1800 350 067
email: customercare@electrolux.com.au
web: www.electrolux.com.au

ELECTROLUX HOME PRODUCTS NEW ZEALAND
telephone: 09 573 2230
fax: 09 573 2221
email: customercare@electrolux.co.nz
web: www.electrolux.co.nz