60cm 4 zone induction cooktop with PowerBoost, auto off and touch control. COMMERCIAL SALES EXCLUSIVE



Product Details

FEATURES

PowerBoost
PowerBoost gives you an intense heat boost to bring water to the boil quickly.

Auto pot detection
Pot detection sensors illuminate the controls that match the cooking zone.

AutoOff
The AutoOff function will automatically shut off the hob if it detects that something is amiss.

Induction
Induction only heats directly beneath the pan, making it quick, easy-to-clean, efficient, and safe.

Power management
Power management redistributes the electrical load to prevent electrical outages.

BENEFITS

SEAR. STIR-FRY. BOIL.
The PowerBoost function gives you an intense heat boost when needed, before automatically dropping to the highest power level. Perfect for pan searing fish, stir-frying crunchy vegetables, or bringing water to the boil quickly.

PLACE POT, ACTIVATE CONTROLS
Let the hob adapt your cooking style, not the other way around. Sensors automatically detect where you place pots on the cooking surface and illuminate the controls, making it easy for you to control each specific area.

SAFE. FAST. EFFICIENT.
Induction technology only heats the area directly beneath the pan, while the surface area around it remains cool. This means that induction hobs are safer and easier to clean than traditional cooktops, as spillages don't burn on. Induction is also faster and more energy efficient, so you can create delicious dishes in less time with less energy.

Specifications

PRODUCT PROFILE

Domestic warranty details (yrs)	2
Cooktop type	induction
Materials/Colour	black ceramic glass
Removable trim (for cleaning)	No
Wok included designed to fit cooktop	No

DIMENSIONS

Total product height (mm)	51
Total product width (mm)	590
Total product depth (mm)	520
Cut out width (mm)	560
Cut out depth (mm)	490

CONTROLS

Controls of Cooktops	touch
Position of controls	front
Functions of Cooktops	automatic switch off,PowerBoost
Indicators/display	fault indicator
Features of Cooktop	hot surface indicator,safety cut off,safety child lock,auto pot sensors

ELEMENTS/BURNERS

LEFT FRONT ZONE

Left front zone	induction
Left front Watts	2300
Left front boost watts	3200
Left front diameter mm	210

LEFT REAR ZONE

Left rear zone	induction
Left rear watts	1400
Left rear diameter mm	140

RIGHT FRONT ZONE

Right front zone	induction
Right front Watts	1400
Right front diameter mm	140

RIGHT REAR ZONE

Right rear zone	induction
Right rear watts	1800
Right rear diameter mm	180

ELECTRICAL SPECIFICATIONS

Connected load KW	6.5
Type of connection	hardwired

SHIPPING

Shipping Volume (m3)	0.49
Shipping Weight (Kg)	12
Pack Dimensions Height (mm)	118
Pack Dimension Width (mm)	680
Pack Dimension Depth (mm)	600

Dimensions

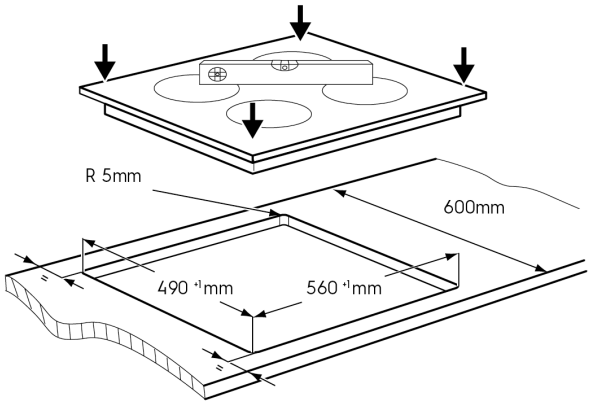

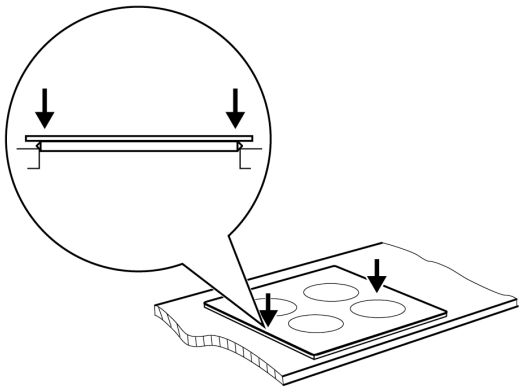

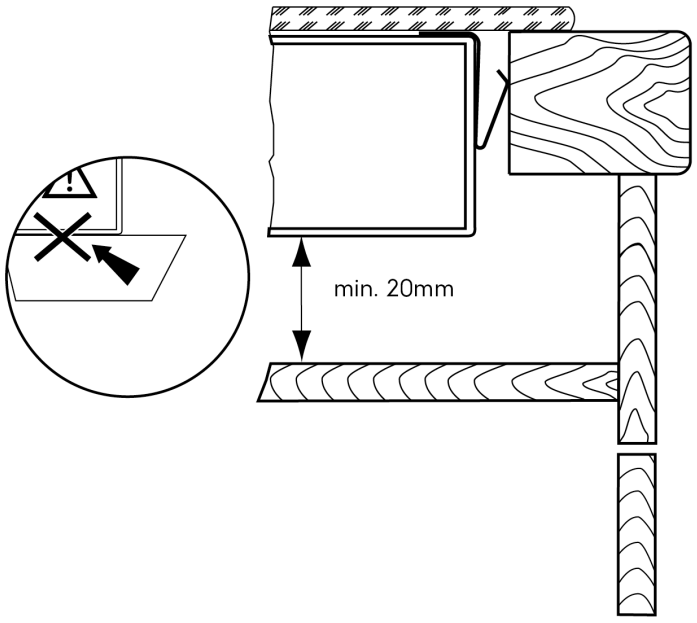

© 2021 Electrolux S.E.A PTE. LTD. E_DIM_EHI641BEA_Sep21

Terms and Conditions

IMPORTANT

This is a guide of product dimensions only. For complete installation instructions, refer to the manual provided with product.

PRODUCT INFORMATION

The descriptors and illustrations in this publication apply to the specific products and models described as at the date of issue. Under our policy of continuous productdevelopment, product specifications may change without notice. Prospective purchasers should therefore check with their retailer to ensure this publication correctly describes theproducts that are being offered for sale. All information supplied is to be used for general reference purposes only and is on the understanding that Electrolux Home Products PtyLtd (Australia) and Electrolux (NZ) Ltd (New Zealand) will not be liable for any loss, liability or damage of whatever kind arising as a result of reliance on such information. Colours ofproducts illustrated are as close as printing limitations allow. Electrolux will at all times comply with its obligations pursuant to law including Trade Practices (Australian Consumer Law) Act and Regulations.

WARRANTY

This warranty only applies to Appliances purchased and used in Australia or New Zealand and used in normal domestic applications and is in addition to (and does not exclude, restrict, or modify in any way) any non-excludable statutory warranties in Australia or New Zealand. All warranties are subject to the conditions set out in the warranty card accompanying the product when purchased.

ELECTROLUX HOME PRODUCTS AUSTRALIA
telephone: 1300 363 640
fax: 1800 350 067
email: customercare@electrolux.com.au
web: www.electrolux.com.au

ELECTROLUX HOME PRODUCTS NEW ZEALAND
telephone: 09 573 2230
fax: 09 573 2221
email: customercare@electrolux.co.nz
web: www.electrolux.co.nz