680L four door french door refrigerator with stainless steel doors, bar handles, 3 star energy rating and R600a refrigerant



Product Details

FEATURES

Mark-resistant stainless steel door finish

External electronic control
This great feature gives push button fridge and freezer temperature control, as well as offering a bottle chill alarm, door alarm, quick chill function and holiday mode settings.

Separate temperature controls for fridge and freezer

Fresh Sense deodoriser
Keep your fridge and its contents smelling fresh with the in-built Fresh Sense deodoriser.

More environmentally friendly R600a refrigerant
R600a is a non-synthetic refrigerant, with a lower global warming potential than conventional refrigerants used in most fridges.

Multi-flow air delivery
With an intelligent airflow system that evenly disperses air to ensure optimum temperatures, your food will be kept fresher for longer.

Frost-free
With the Electrolux frost free system, there's no more ice build up in your fridge or freezer, eliminating the need for defrosting.

Twist ice and serve (removable)
make ice with ease and cool drinks at a twist

Door alarm

Fast freeze
Rapidly freeze large amounts of food, without affecting your fridge's temperature

Freezer baskets with clear fascia
Makes finding items simple.

Full length designer bar handles
Adds style and elegance to your kitchen.

Extra wide fridge compartment

Two door freezer compartment
Keeps your freezer working more efficiently.

Vacation (holiday) mode reduces energy wastage when the fridge is not being used for an extended period

Child lock
The child lock can be turned on to prevent children tampering with the electronic controls.

4 castors

BENEFITS

A place for everything
Enjoy the carefully considered interior space and multiple storage solutions. With handy deli drawers, individual crisper bins, deep bottle bins and seven freezer drawers, you can easily store food and drinks of all shapes and sizes.

Mark-resistant stainless steel
With an invisible, mark-resistant coating to help protect the exterior from fingerprints and grime, it couldnt be easier to keep your fridge in pristine condition.

Extra wide fridge compartment
Perfect for those who love to entertain, the spacious interior is large enough to fit even the biggest party platters. And with multiple drawers and compartments, organising and accessing your favourite fresh foods couldnt be easier.

Enjoy total control
With an eye-catching, streamlined style, the electronic touch controls make a stylish kitchen statement. They're also easy to reach and use, which makes programming your fridge a breeze.

Specifications

PRODUCT PROFILE

Domestic warranty details (yrs)	2
Additional domestic warranty for the sealed refrigeration system only (yrs)	3
Refrigerator Type	french door
Exterior door finish	Stainless steel
Handle design	bar handle
Fridge door opening	left and right
Cooling system	frost free
Freezer door opening	left and right
Refrigerant	R600a

DIMENSIONS

Total height (mm)	1830
Cabinet height (mm)	1810
Total width (mm)	890
Cabinet width (mm)	890
Total depth (mm)	818
Cabinet depth (mm)	685
Depth door open 90degree (mm)	1120
Air space above cabinet (mm)	102
Food compartment capacity (gross in litres)	424
Freezer compartment capacity (gross in litres)	252
Total Gross Capacity (L)	676

ENERGY

REFRIGERATOR SYSTEM

ENERGY

Energy Star Rating AS/NZS 4474.2:2009	3
Energy consumption AS/NZS 4474.2:2009 (kWhr/yr)	556

REFRIGERATOR SYSTEM

Controls	electronic (with display)
Controls location	external
Controls type	buttons
Control functions	quick freeze function,vacation mode,freezer temp alarm,multi-flow air delivery
Door alarm	fridge and freezer

FOOD COMPARTMENT

DELI-COMPARTMENT

Deli-Compartment Runner system	rollers
Half width compartment	2

SHELVING

Shelf material	glass
Number of shelf levels	4
Type of shelf	spill safe shelf,adjustable shelf

CRISPERS

Crisper lid/shelf	plastic

LIGHTING

Main light	LED

OTHER PROPERTIES

FOOD COMPARTMENT DOOR

BINS

Other Properties-FOOD COMPARTMENT	Egg tray

Deep bottle bin	2
Shallow bin	4

DAIRY COMPARTMENT

Full width dairy, one lid	1

FREEZER COMPARTMENT

ICE FACILITY

Ice cube tray	1
Twist ice and serve	1

BASKET/DRAWER

Full width plastic basket	3
Basket/Drawer runner system	rollers
Full width deep plastic basket	2

Dimensions

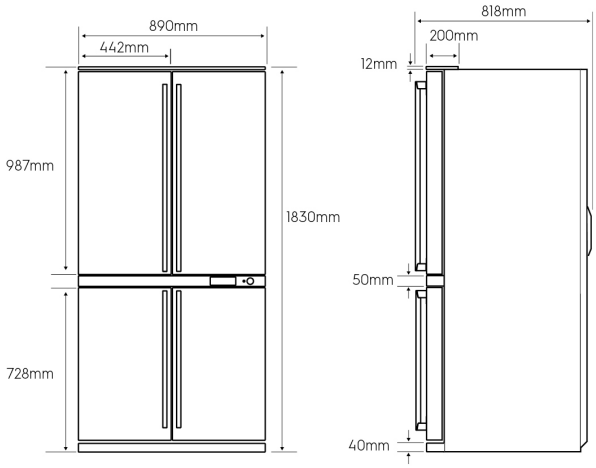

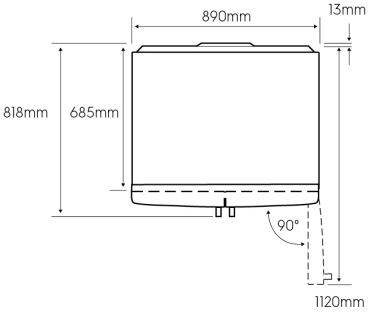

Minimum Recommended Airspaces

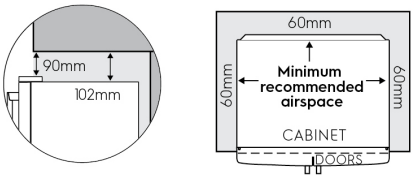

NOTE: Doors are designed to sit proud of cabinetry (not flush).

When positioned in a corner area, spacing of at least 325mm on the sides will allow the doors to open enough to enable removal of the crisper bins and shelves.

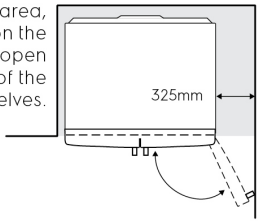

Terms and Conditions

IMPORTANT

This is a guide of product dimensions only. For complete installation instructions, refer to the manual provided with product.

PRODUCT INFORMATION

The descriptors and illustrations in this publication apply to the specific products and models described as at the date of issue. Under our policy of continuous productdevelopment, product specifications may change without notice. Prospective purchasers should therefore check with their retailer to ensure this publication correctly describes theproducts that are being offered for sale. All information supplied is to be used for general reference purposes only and is on the understanding that Electrolux Home Products PtyLtd (Australia) and Electrolux (NZ) Ltd (New Zealand) will not be liable for any loss, liability or damage of whatever kind arising as a result of reliance on such information. Colours ofproducts illustrated are as close as printing limitations allow. Electrolux will at all times comply with its obligations pursuant to law including Trade Practices (Australian Consumer Law) Act and Regulations.

WARRANTY

This warranty only applies to Appliances purchased and used in Australia or New Zealand and used in normal domestic applications and is in addition to (and does not exclude, restrict, or modify in any way) any non-excludable statutory warranties in Australia or New Zealand. All warranties are subject to the conditions set out in the warranty card accompanying the product when purchased.

ELECTROLUX HOME PRODUCTS AUSTRALIA
telephone: 1300 363 640
fax: 1800 350 067
email: customercare@electrolux.com.au
web: www.electrolux.com.au

ELECTROLUX HOME PRODUCTS NEW ZEALAND
telephone: 09 573 2230
fax: 09 573 2221
email: customercare@electrolux.co.nz
web: www.electrolux.co.nz