Electrolux 90cm touch on glass control stainless Canopy rangehood, 3 speed + boost, LED lighting. Hob2Hood link capable



Product Details

FEATURES

Beautifully designed	Stainless steel body with chimney	Black fascia with touch controls	3 speed fan + Boost Function
LED lighting	Centrifugal fan	Multi-layer filters	

BENEFITS

Hob2Hood
With our innovative Hob2Hood technology you can effortlessly control your kitchen environment as you cook. This smart technology allows a compatible rangehood and hob to seamlessly work together to instantly get rid of unpleasant cooking odours. As you increase the heat, the temperature sensors automatically adjust your hood to your cooking intensity.

Touch on glass controls
Featuring sleek and stylish touch on glass controls, for easy cleaning and seamless operation

Improved air quality
Inspired by the demands of professional kitchens, our Inspiration rangehoods quietly and efficiently remove cooking odours, smoke and steam. Air quality is also improved, so you enjoy maximum freshness.

Easy to clean and maintain
Cleaning need not be a chore, and with our Electrolux rangehoods it isn't. Designed to be easy to clean, simply put the removable filters into the dishwasher.

Specifications

PRODUCT PROFILE

Domestic warranty details (yrs)	2
Type of Rangehood	wall mounted canopy
Nominal width (cm)	900
Finish of Rangehood	stainless steel,glass

MOTOR/FAN

Number of fans	2
Number of fans speeds	4
Variable speed control	Yes
Type of motor	centrifugal
Auto fan timer	Yes
Maximum airflow M3/Hr	725
Noise level dB high	63
Noise level dB low	55

DIMENSIONS

Total product height (mm)	1070
Total product width (mm)	900
Total product depth (mm)	470
Diameter of ducting (mm)	150

CONTROLS

Control panel	touch on glass controls
Safety/ display indicators	auto thermal cutout safety switch,grease filter saturation indicator
LED speed display	Yes
Hob2Hood function	Yes

DIMENSIONS

Minimum installation height from cooking surface Gas (mm)	650
Minimum installation height from cooking surface Electric (mm)	650
Maximum canopy chimney height (mm)	1145
Flue cover depth (mm)	260
Flue cover width (mm)	300

FILTERS

Number of filters	3
Type of filter	multilayer aluminum micromesh filters
Dishwasher safe	Yes

LIGHTS

Number of lights	2
Wattage of light	40
Type of light	LED

DUCTING / RECIRCULATION

Ducting	yes
Top or rear duct hole	top

DUCTING / RECIRCULATION

Recirculation option	Yes
Recirculation kit	optional accessory
Optional extension flue	No
Ducting accessory available	Yes

Dimensions

Dimensions

	width	height	depth
Duct diameter	150		
Product (mm)	900	55	470

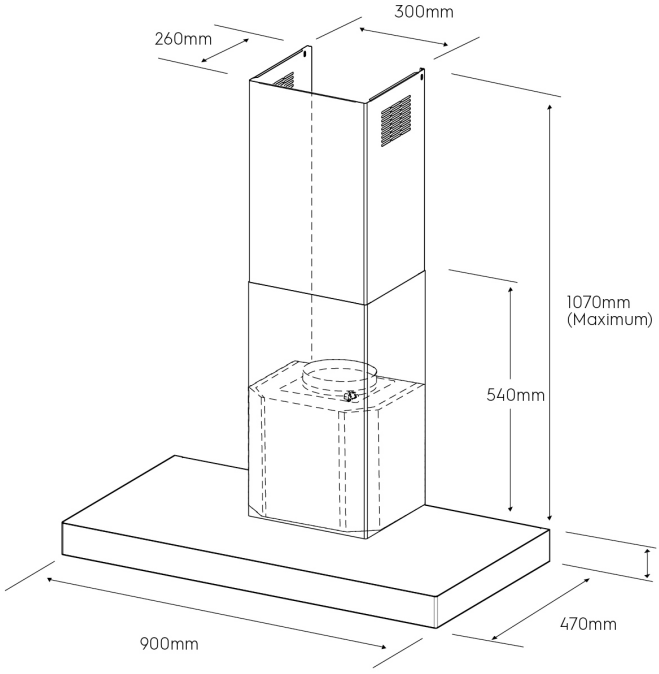

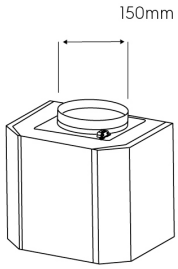

Terms and Conditions

IMPORTANT

This is a guide of product dimensions only. For complete installation instructions, refer to the manual provided with product.

PRODUCT INFORMATION

The descriptors and illustrations in this publication apply to the specific products and models described as at the date of issue. Under our policy of continuous productdevelopment, product specifications may change without notice. Prospective purchasers should therefore check with their retailer to ensure this publication correctly describes theproducts that are being offered for sale. All information supplied is to be used for general reference purposes only and is on the understanding that Electrolux Home Products PtyLtd (Australia) and Electrolux (NZ) Ltd (New Zealand) will not be liable for any loss, liability or damage of whatever kind arising as a result of reliance on such information. Colours ofproducts illustrated are as close as printing limitations allow. Electrolux will at all times comply with its obligations pursuant to law including Trade Practices (Australian Consumer Law) Act and Regulations.

WARRANTY

This warranty only applies to Appliances purchased and used in Australia or New Zealand and used in normal domestic applications and is in addition to (and does not exclude, restrict, or modify in any way) any non-excludable statutory warranties in Australia or New Zealand. All warranties are subject to the conditions set out in the warranty card accompanying the product when purchased.

ELECTROLUX HOME PRODUCTS AUSTRALIA
telephone: 1300 363 640
fax: 1800 350 067
email: customercare@electrolux.com.au
web: www.electrolux.com.au

ELECTROLUX HOME PRODUCTS NEW ZEALAND
telephone: 09 573 2230
fax: 09 573 2221
email: customercare@electrolux.co.nz
web: www.electrolux.co.nz