52cm integrated rangehood in dark stainless steel with Hob2Hood technology, maximum airflow of 680 m3/hr and efficient perimeter extraction.

Product Details

FEATURES

Hob2Hood technology	Max airflow of 680m3/h	Operation noise as low as 51dB(A)	Multi-layer filters
Dishwasher safe filters	LED lighting	3 speed fan + Boost Function	

BENEFITS

The hands free hood
When paired with a compatible Electrolux extractor hood, the Hob2Hood automatically switches it on as you start cooking and adjusts the fan speed based on how you are using your hob. This means you can boil, sear or stir-fry without having to touch your hood with greasy fingers.

Maximise your airflow
Remove odours and vapours quickly and efficiently with a high airflow rate of 680m3/h

Keep the noise down
With noise levels as low as 51dB(A), keep the conversation going smoothly when entertaining guests.

Best of both worlds
Perimeter extraction gives you the best of both worlds it whisks away odours efficiently and is easy to clean.

Specifications

PRODUCT PROFILE

Domestic warranty details (yrs)	2
Type of Rangehood	integrated
Nominal width (cm)	600
Finish of Rangehood	Dark stainless steel

MOTOR/FAN

Number of fans	2
Number of fans speeds	3
Variable speed control	No
Type of motor	tangential
Perimeter extraction	Yes
Maximum airflow M3/Hr	680
Noise level dB high	66
Noise level dB low	51

DIMENSIONS

Total product height (mm)	330
Total product width (mm)	520
Total product depth (mm)	300
Diameter of ducting (mm)	150

CONTROLS

Control panel	electronic push button
LED speed display	No
Removal front fascia	No
Hob2Hood function	Yes

DIMENSIONS

Minimum installation height from cooking surface Gas (mm)	650
Minimum installation height from cooking surface Electric (mm)	600
Cut out width (mm)	492
Cut out depth (mm)	259
Cut out height (mm)	330

FILTERS

Number of filters	2
Type of filter	multilayer aluminum micromesh filters
Dishwasher safe	Yes

LIGHTS

Number of lights	2
Wattage of light	2
Type of light	LED

DUCTING / RECIRCULATION

Ducting	optional accessory
Top or rear duct hole	top
Recirculation option	Yes

SHIPPING

Shipping Volume (m3)	0.094
Shipping Weight (Kg)	10

DUCTING / RECIRCULATION

Front recirculating option	No
Ducting diameter (mm)	150

SHIPPING

Pack Dimensions Height (mm)	415
Pack Dimension Width (mm)	365
Pack Dimension Depth (mm)	605

STUFFING QUANTITIES

20ft	300
40ft	600
40ft HC	688

Dimensions

Model:
ERI522DSD

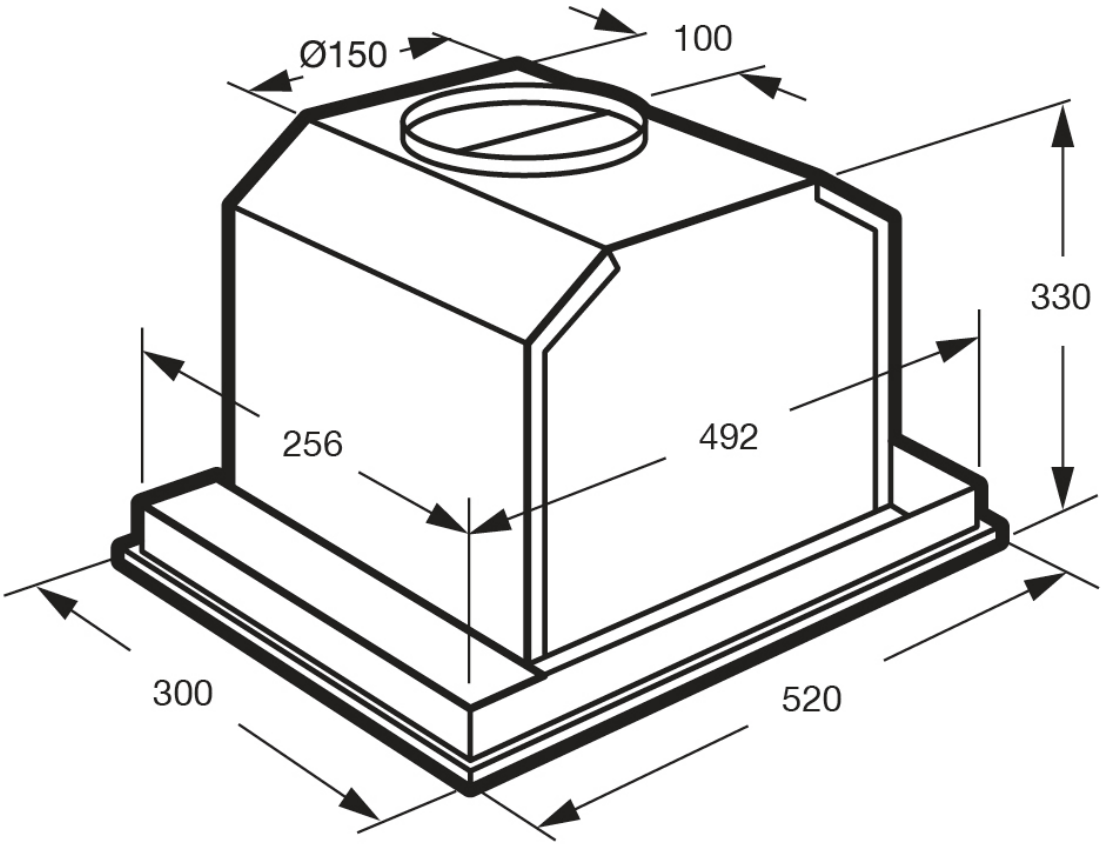

*Unless specified in rangehood installation details.

Terms and Conditions

IMPORTANT

This is a guide of product dimensions only. For complete installation instructions, refer to the manual provided with product.

PRODUCT INFORMATION

The descriptors and illustrations in this publication apply to the specific products and models described as at the date of issue. Under our policy of continuous productdevelopment, product specifications may change without notice. Prospective purchasers should therefore check with their retailer to ensure this publication correctly describes theproducts that are being offered for sale. All information supplied is to be used for general reference purposes only and is on the understanding that Electrolux Home Products PtyLtd (Australia) and Electrolux (NZ) Ltd (New Zealand) will not be liable for any loss, liability or damage of whatever kind arising as a result of reliance on such information. Colours ofproducts illustrated are as close as printing limitations allow. Electrolux will at all times comply with its obligations pursuant to law including Trade Practices (Australian Consumer Law) Act and Regulations.

WARRANTY

This warranty only applies to Appliances purchased and used in Australia or New Zealand and used in normal domestic applications and is in addition to (and does not exclude, restrict, or modify in any way) any non-excludable statutory warranties in Australia or New Zealand. All warranties are subject to the conditions set out in the warranty card accompanying the product when purchased.

ELECTROLUX HOME PRODUCTS AUSTRALIA

telephone: 1300 363 640
fax: 1800 350 067
email: customercare@electrolux.com.au
web: www.electrolux.com.au

ELECTROLUX HOME PRODUCTS NEW ZEALAND

telephone: 09 573 2230
fax: 09 573 2221
email: customercare@electrolux.co.nz
web: www.electrolux.co.nz