60cm built-under dishwasher, finished in mark resistant dark stainless steel. AirDry technology, light beam on floor indicator and 15 place settings.



Product Details

FEATURES

Aqua Control
Peace of mind with Aqua Control anti-flood protection.

FlexiBasket
Enjoy the perfect combination of foldable racks and shelves with FlexiLift adjustable upper basket, and successfully load even those awkwardly shaped items with ease.

Auto Off

XXL extra tall tub

FlexiSpray arm
Reaches all your dishes for an impeccable clean every time, no matter how they are.

Light Beam on floor indicator
Always know just how long is left of your dishwasher's cycle.

Intelligent AutoFlex Program
Optimises water and energy usage based on load size and cleaning intensity

30 minutes QuickPlus at 60
When you've got a load of just used plates and pans, you can use the 30 minutes QuickPlus program for great results in no time.

Cutlery drawer
Free up the bottom basket to fit more in with the removable cutlery tray

SoftGrip & SoftSpikes
Take extra care of your delicate glasses by holding them gently but firmly in place

MyFavourite program
This handy feature allows you to save your personal favourite wash program and use it with the touch of a button.

XtraDry

BENEFITS

Quiet Inverter System
Enjoy the peace that comes with an ultra-quiet dishwasher. With a quiet 44dBA operational noise level, you can wash your dishes at any time convenient for you. The Inverter motor is also extremely durable and long lasting.

All corners reached
Achieve outstanding results with our FlexiSpray arm and five spray levels. Unlike traditional spray arms, ours moves in multiple directions, reaching even the most crowded area to ensure all of your items are impeccably clean, no matter how they are loaded.

Clean more than ever
With 25% more capacity than an average dishwasher, RealLife can accommodate even your most unusually shaped dishes. Enjoy complete cooking freedom using whichever utensils, pots and serving platters suit your culinary creativity knowing everything is loaded into RealLife will be cared for.

Naturally inspired drying
Ensure your dishes are dry when you're ready to put them away. Our new AirDry technology automatically opens the door by 10cm towards the end of the cycle, and the door stays open until you're ready to unload. This ensures a natural way to get maximum drying performance while effectively reducing your energy costs.

Cleans glasses gently and pans intensively in the same cycle
The FlexiWash program uses different settings for the upper and lower baskets, so you always get the best results for each item, even if its a mixed load.

Take control with TimeSaver
Designed to complement your busy lifestyle, the new TimeSaver option puts you in control. You can cut the length of selected cycle times so that your dishes are ready at a time that suits you. You can also wash a full load in up to 50% less time with the Eco, FlexiWash and Intensive programs. This handy option increases the pressure and the temperature of the water to ensure fabulous wash results every time.

Specifications

PRODUCT PROFILE

Domestic warranty details (yrs)	2
Type of Dishwashers	built under
Place settings	15
Drying system	AirDry
Number of spray arms	3
Top shower	Yes

SPECIFICATION

Water Efficiency Star Rating	4.5
Water consumption (litres)	12.5
Energy Efficiency Star Rating	3.5
Energy consumption cold water (kWhr/yr)	286
Noise level dBA	45
Water supply	cold or hot (maximum 60°C)
Basket colour	grey
Inverter system	Yes

DIMENSIONS

Total height (mm)	818
Total width (mm)	596
Total depth (mm)	570

WASH PROGRAMS

Number of Programs	7
Programs	rinse and hold,AutoFlex 45°C-70°C,FlexiWash 50°C-65°C,Eco 50°C,QuickPlus 60°C,Intensive 70°C,GlassCare 45°C

DIMENSIONS

Height adjustment (mm)	80
Cabinet requirement excluding worktop (height)	820-880
Cabinet requirement excluding worktop(width)	600
Cabinet requirement excluding worktop (depth)	570

WASH PROGRAMS

Wash option	Delay start (1-24 hours),XtraDry,TimeManager,ExtraHygiene,My Favourite

CONTROL PANEL

Control panel type	LED Display
Top mounted control panel	Yes
Control panel finish	black
Display indicators	service code,program selected,delay start,rinse aid,MyFavorite program,fault display,Beam On Floor Two Coloured,XtraDry,TimeManager

FEATURES

Other Features	load sensing,Auto Off,delay start,soiled sensing ,LightBeam-on-floor
Water safety system	aqua control,anti-flood protection
Filter system	3 stage
Dispenser	detergent,rinse aid
Number of spray levels	5

EXTERIOR

Door finish	mark resistant stainless steel

UPPER BASKET

EXTERIOR

Side colour	black
Plinth colour (kickboard)	no plinth supplied

UPPER BASKET

Upper basket features	height adjustable on full load,soft spikes for tall glass,Foldable glass rack,SoftGrip
Foldable cup shelves	4
Foldable Racks	2

LOWER BASKET

Foldable Racks	2

HOSES

Inlet hose length	150
Drain hose length	150
extension hose	spare part

Dimensions

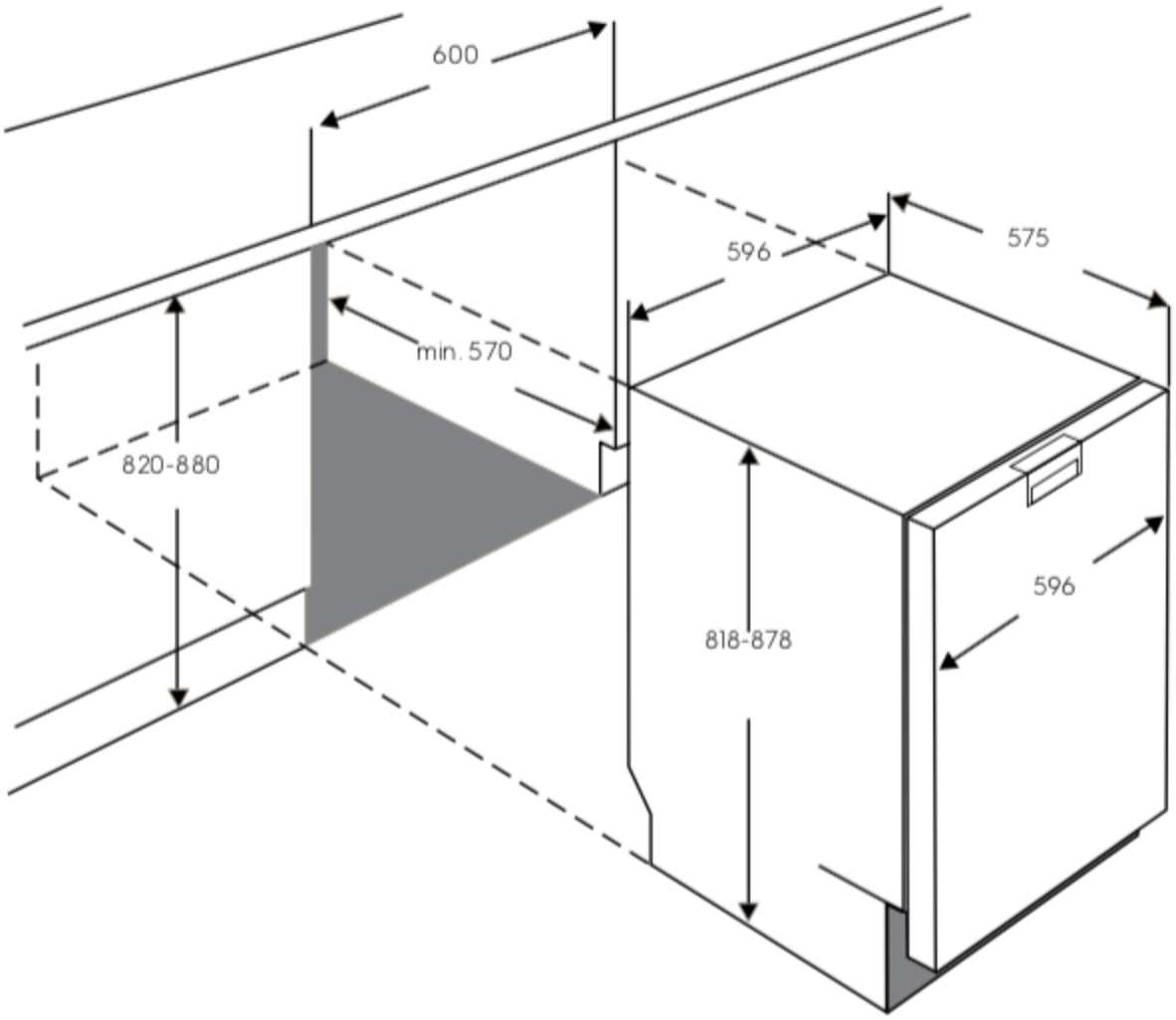

Please note! Dimensions to be used as a guide only. All customers MUST refer to the user manual supplied with the product for detailed installation instructions.

Terms and Conditions

IMPORTANT

This is a guide of product dimensions only. For complete installation instructions, refer to the manual provided with product.

PRODUCT INFORMATION

The descriptors and illustrations in this publication apply to the specific products and models described as at the date of issue. Under our policy of continuous productdevelopment, product specifications may change without notice. Prospective purchasers should therefore check with their retailer to ensure this publication correctly describes theproducts that are being offered for sale. All information supplied is to be used for general reference purposes only and is on the understanding that Electrolux Home Products PtyLtd (Australia) and Electrolux (NZ) Ltd (New Zealand) will not be liable for any loss, liability or damage of whatever kind arising as a result of reliance on such information. Colours ofproducts illustrated are as close as printing limitations allow. Electrolux will at all times comply with its obligations pursuant to law including Trade Practices (Australian Consumer Law) Act and Regulations.

WARRANTY

This warranty only applies to Appliances purchased and used in Australia or New Zealand and used in normal domestic applications and is in addition to (and does not exclude, restrict, or modify in any way) any non-excludable statutory warranties in Australia or New Zealand. All warranties are subject to the conditions set out in the warranty card accompanying the product when purchased.

ELECTROLUX HOME PRODUCTS AUSTRALIA
telephone: 1300 363 640
fax: 1800 350 067
email: customercare@electrolux.com.au
web: www.electrolux.com.au

ELECTROLUX HOME PRODUCTS NEW ZEALAND
telephone: 09 573 2230
fax: 09 573 2221
email: customercare@electrolux.co.nz
web: www.electrolux.co.nz