60cm built under dishwasher with ComfortLift, MaxiFlex cutlery drawer, AirDry technology, beam on floor cycle indicator and 14 place settings.



Product Details

FEATURES

ComfortLift
ComfortLift makes it easy to load and unload.

MaxiFlex
MaxiFlex drawer space can be adapted to the load.

SatelliteClean
SatelliteClean reaches all items with water jets.

ExtraHygiene
The ExtraHygiene function gives you maximum cleaning performance with hygienic care.

Beam on Floor
Beam-on-Floor shows you when its time to unload.

AirDry
Allows natural airflow in towards the end of the cycle ensuring dry dishes

Eco program
Eco program is water and energy efficient.

BENEFITS

RAISING THE STANDARD
ComfortLift is the first of its kind, making it easier than ever to load and unload your dishes. The unique hinge mechanism allows you to gently lift the lower rack, meaning you no longer need to bend down low to load and unload heavy plates, platters, pots, and pans.

MAKE ROOM FOR MORE
The MaxiFlex drawer accommodates everything from spoons to spatulas. From multiple cutlery sets to over-sized utensils, the flexible dividers mean you can customise the drawer according to the load. Flatware is kept separate from larger items and the added depth increases the capacity for each cycle.

THE GLASS-CARE SPECIALIST
SoftGrips and SoftSpikes gently support your delicate glasses, safeguarding them from damage, while the dedicated glassware program means you no longer have to hand wash. SoftGrips gently secure each individual glass stem, while the rubber SoftSpikes cushion glassware from vibration during the wash cycle so they do not move around.

MAX COVERAGE. MAX CLEAN
SatelliteClean shoots multiple jets of water into every corner of the dishwasher to ensure every item is thoroughly cleaned. The double rotation movement continuously changes the angle of the water jets to ensure maximum coverage, delivering outstanding cleaning results.

CLEAN WITH EXTRA HYGIENE

The ExtraHygiene function gives you maximum cleaning performance with hygienic care. With the ExtraHygiene function, the final rinse phase heats up to above 60C and keeps the temperature high for a minimum of 10 minutes to sanitize your dishes.

STATUS CHECK FROM A DISTANCE

Beam-on-Floor projects the status of your wash program so that you can easily see when its time to unload. A red spot on the floor means that the program is still running, while a green spot means that it is completed.

UP TO 3X BETTER DRYING*

AirDry technology finishes each cycle with a breath of fresh air, performing three-times better than closed-door systems. The door automatically opens 10 cms towards the end of the drying phase, without you lifting a finger. This allows air to circulate inside, leaving plates and cutlery completely dry and spotless at the end of the cycle, whilst also saving energy.* Compared with our closed system.

SWITCH TO ECO

Suitable for cleaning normally soiled tableware, the Eco Program is this dishwashers most efficient program for water and energy consumption.

Specifications

PRODUCT PROFILE

Domestic warranty details (yrs)	2
Type of Dishwashers	built under
Place settings	14
Drying system	AirDry
Number of spray arms	3
Top shower	Yes

SPECIFICATION

Water Efficiency Star Rating	5
WELS Registration Number	D02716
Water consumption (litres)	11.2
Energy Efficiency Star Rating	3.5
Energy consumption cold water (kWhr/yr)	273
Noise level dBA	44
Water supply	cold or hot (maximum 60°C)
Basket colour	grey
Service cord length	1600
Inverter system	Yes

DIMENSIONS

Total height (mm)	818

WASH PROGRAMS

Number of Programs	8

DIMENSIONS

Total width (mm)	596
Total depth (mm)	570

WASH PROGRAMS

Programs	Quick 30 min,Regular 90 min,AUTO Sense,Machine Care,rinse and hold,Light 60 min,Heavy 160 min,ECO 180 min
Wash option	Delay start (1-24 hours),ExtraHygiene,GlassCare,ExtraPower
Range of temperatures	4

CONTROL PANEL

Control panel type	Touch Control electronic
Top mounted control panel	Yes
Control panel finish	stainless steel
Display indicators	delay start,Beam On Floor Two Coloured,rinse aid,service code,program selected,ExtraHygiene,ExtraPower

FEATURES

Other Features	beam on floor indicator,Auto Off,delay start
Water safety system	aqua control
Dispenser	detergent,rinse aid
Number of spray levels	3

EXTERIOR

Door finish	dark stainless steel
Side colour	grey

UPPER BASKET

Upper basket features	soft spikes for tall glass,SoftGrip,Foldable glass rack,easy lift adjustable upper basket

EXTERIOR

Plinth colour (kickboard)	no plinth supplied
Removable worktop	No

UPPER BASKET

Foldable cup shelves	4
Foldable Racks	2

LOWER BASKET

Lower Basket Features	ComfortLift
Foldable Racks	4
Foldable cup shelves	0

HOSES

Inlet hose length	1600
extension hose	spare part

SHIPPING

Shipping Volume (m3)	0.376
Shipping Weight (Kg)	47.7
Pack Dimensions Height (mm)	870
Pack Dimension Width (mm)	635
Pack Dimension Depth (mm)	680

STUFFING QUANTITIES

40ft HC	150

Dimensions

Model:
ESF97400RKX

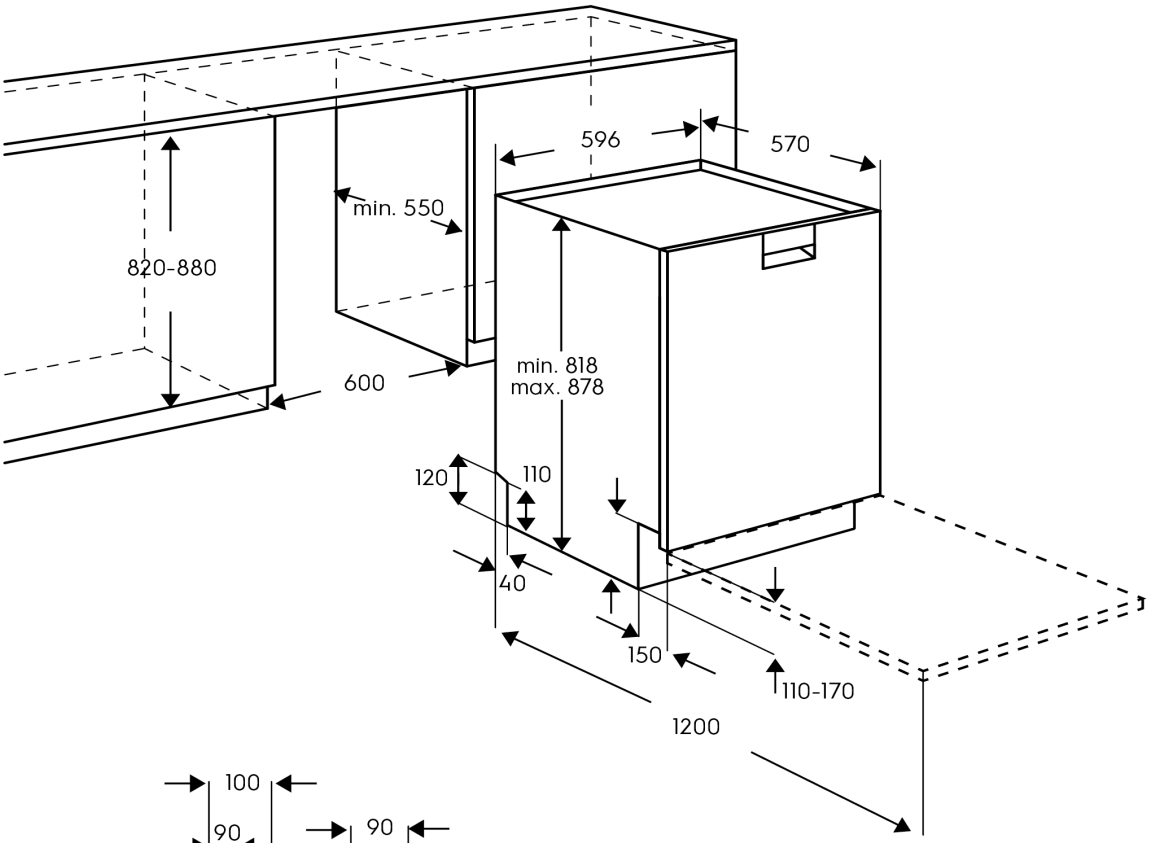

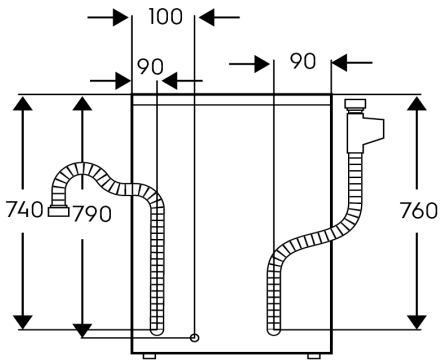

© 2022 Electrolux S.E.A PTE. LTD. E_Dim_ESF97400RKX_Apr22

Terms and Conditions

IMPORTANT

This is a guide of product dimensions only. For complete installation instructions, refer to the manual provided with product.

PRODUCT INFORMATION

The descriptors and illustrations in this publication apply to the specific products and models described as at the date of issue. Under our policy of continuous productdevelopment, product specifications may change without notice. Prospective purchasers should therefore check with their retailer to ensure this publication correctly describes theproducts that are being offered for sale. All information supplied is to be used for general reference purposes only and is on the understanding that Electrolux Home Products PtyLtd (Australia) and Electrolux (NZ) Ltd (New Zealand) will not be liable for any loss, liability or damage of whatever kind arising as a result of reliance on such information. Colours ofproducts illustrated are as close as printing limitations allow. Electrolux will at all times comply with its obligations pursuant to law including Trade Practices (Australian Consumer Law) Act and Regulations.

WARRANTY

This warranty only applies to Appliances purchased and used in Australia or New Zealand and used in normal domestic applications and is in addition to (and does not exclude, restrict, or modify in any way) any non-excludable statutory warranties in Australia or New Zealand. All warranties are subject to the conditions set out in the warranty card accompanying the product when purchased.

ELECTROLUX HOME PRODUCTS AUSTRALIA
telephone: 1300 363 640
fax: 1800 350 067
email: customercare@electrolux.com.au
web: www.electrolux.com.au

ELECTROLUX HOME PRODUCTS NEW ZEALAND
telephone: 09 573 2230
fax: 09 573 2221
email: customercare@electrolux.co.nz
web: www.electrolux.co.nz