60cm multi-function 8 stainless steel oven with Bake +Steam, electronic touch controls and 80L gross capacity. COMMERCIAL EXCLUSIVE.



Product Details

FEATURES

Bake +Steam	8 oven functions	Easy glide side racks	Electronic touch controls
Mark-resistant stainless steel finish	Metalised knob	80L gross capacity oven	

BENEFITS

Effortless baking
Adding steam to your Baking Program can lift your baking skills to a whole new level. The Bake +Steam function on this oven uses a touch of steam to create a richer and glossier colour, a crispier crust and soft delicious texture for your home-baked goodies.

Fast heat up function
When you need to start cooking immediately, simply use the fast heat-up function. Guaranteed to save you time and hassle.

Huge 80L gross capacity oven
Designed for the entertainer and large families, this large capacity 80-litre oven will make catering for every occasion quick and easy. Plus, energy use is also kept to a minimum, despite its size.

Specifications

PRODUCT PROFILE

Domestic warranty details (yrs)	2
Type of Oven	single oven
Oven fuel	electric
Materials/Colour	mark resistant stainless steel,black
Controls of Oven	control knob,3 button touch control LED
Cooling fan	Yes

DIMENSIONS

PRODUCT DIMENSION

Total height (mm)	597
Total width (mm)	596
Total depth (mm)	568

FLUSH FIT CUT OUT

Flush fit cut out height (mm)	600
Flush fit cut out width (mm)	600
Flush fit cut out depth (mm)	581

MAIN OVEN

Gross capacity litres	80
Useable capacity litres	72
Oven function	multifunction
Number of functions	8
Oven Functions	rapid heat,fan grill,full grill,pastry,grill,fan bake,bake/pizza,Bake +Steam

MAIN OVEN

Oven liner	pyrolux high temperature enamel
Timer functions	acoustic signal,duration,minute minder,Countdown,End time,Delayed start,Time of day

ELECTRICAL CONNECTION

Connected load KW	3.1
Maximum current rating (amps)	12.9
Type of connection	hardwired
Minimum Fuse rating (amps)	16

OTHER FEATURES

Door	removable door,removable inner glass panes
Timer	Fully programmable touch control timer
Lights	1
Light wattage	25
Light position	rear
Shelf support	Easy glide side racks
Number of shelves	3
Closed door grilling	Yes
Included accessories	2 x chromed wire shelf,baking tray,grill/oven pan,side racks
Layers of glass in door	2

OTHER FEATURES

Number of shelf positions	5

SHIPPING

Shipping Volume (m3)	0.28
Shipping Weight (Kg)	43.5
Pack Dimensions Height (mm)	665
Pack Dimension Width (mm)	635
Pack Dimension Depth (mm)	670
Total shelf area (m^2)	42.55

STUFFING QUANTITIES

40ft	153

Dimensions

Models:

EVE602DSE
EVE602SE
EVE602DSD
EVE602SD
EVE614SD
EVE614DSD
EVE616DSD

Cut-out dimensions

Type of fit	A (width)	B (height)	C (depth)
Flush fit (mm)	600	600	581 min.

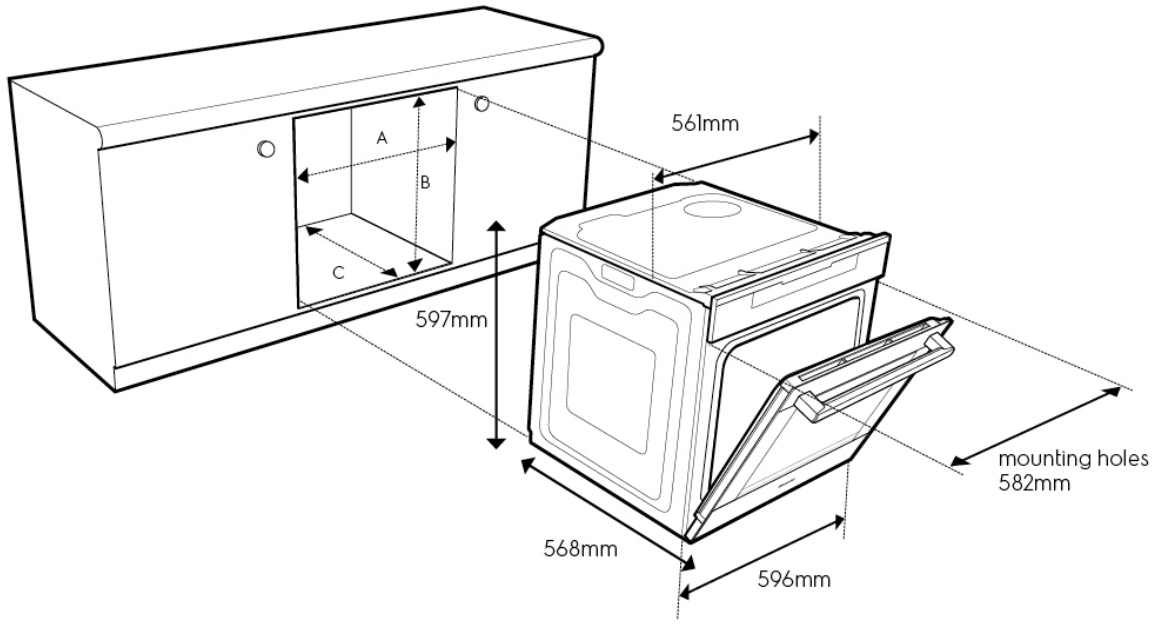

Please note! Dimensions to be used as a guide only. All customers MUST refer to the user manual supplied with the product for detailed installation instructions.

Terms and Conditions

IMPORTANT

This is a guide of product dimensions only. For complete installation instructions, refer to the manual provided with product.

PRODUCT INFORMATION

The descriptors and illustrations in this publication apply to the specific products and models described as at the date of issue. Under our policy of continuous productdevelopment, product specifications may change without notice. Prospective purchasers should therefore check with their retailer to ensure this publication correctly describes theproducts that are being offered for sale. All information supplied is to be used for general reference purposes only and is on the understanding that Electrolux Home Products PtyLtd (Australia) and Electrolux (NZ) Ltd (New Zealand) will not be liable for any loss, liability or damage of whatever kind arising as a result of reliance on such information. Colours ofproducts illustrated are as close as printing limitations allow. Electrolux will at all times comply with its obligations pursuant to law including Trade Practices (Australian Consumer Law) Act and Regulations.

WARRANTY

This warranty only applies to Appliances purchased and used in Australia or New Zealand and used in normal domestic applications and is in addition to (and does not exclude, restrict, or modify in any way) any non-excludable statutory warranties in Australia or New Zealand. All warranties are subject to the conditions set out in the warranty card accompanying the product when purchased.

ELECTROLUX HOME PRODUCTS AUSTRALIA

telephone: 1300 363 640
fax: 1800 350 067
email: customercare@electrolux.com.au
web: www.electrolux.com.au

ELECTROLUX HOME PRODUCTS NEW ZEALAND

telephone: 09 573 2230
fax: 09 573 2221
email: customercare@electrolux.co.nz
web: www.electrolux.co.nz