Wash a 12KG load in just 45min thanks to its IntelliQuick cycle. Take advantage of IntelliDose which uses sensors to deliver the optimal detergent dose with every load. Its UltraMix technology thoroughly dissolves detergent, preventing visible residue on your clothes. Enjoy its SmartSelect UI, allowing you to adjust washing based on your needs and guiding you save energy, time and water. The Woolmark Green programme is as gentle as handwashing for your delicate woollen garments.



Product Details

FEATURES

Woolmark Green
Woolmark Green certifies water and energy efficiency during washing for wool care.

IntelliDose
IntelliDose uses intelligent sensors to deliver the optimal detergent dose and wash for every load.

Vapour Refresh
Vapour Refresh program uses vapour to help remove wrinkles and odours.

SmartSelect
SmartSelect adjusts washing based on your needs, guiding you to save energy, time and water.

Sanitise
Sanitise program wash and steam above 60°C to remove more than 99.99% of common bacteria & viruses.*** Tested for Candida albicans, MS2 Bacteriophage and Escherichia coli in external test performed by Swissatest Testmaterialien AG in 2021 ("Test Report No. 202120117, 20232072").

DelicatePlus
DelicatesPlus provides gentle care for all your delicates, helping them last for longer.

UltraMix
UltraMix technology thoroughly dissolves detergent, preventing visible residue on your clothes.

CareDrum
CareDrum, with its unique water-cushion technology, gently cares and protects your laundry.

SensorWash
SensorWash sensors help to remove up to 53 different stains without pre-treatment or pre-washing.* *Tested on 5kg load stains from food, household and personal products using Cotton 40°C cycle + StainPro option. Results may vary depending on factors such as models, load size, type and duration of soiling, detergent type and water hardness.

IntelliQuick
IntelliQuick selects the best suited programme based on your laundry load size for precise care.

BENEFITS

QUICK 12KG WASH IN 45 MINS

New IntelliQuick smartly selects the quickest programme based on your laundry load for precise care and cleans a full load in 45 minutes. This removes any pre-laundry stress by providing efficient cleaning with the precise level of care for your clothes, making them last longer without additional energy or water usage.

PRECISE DOSE, UP TO 60% LESS DETERGENT

The UltimateCare 900 IntelliDose Machine uses sensors to deliver the optimal detergent dose for every load. With SensorWash, sensors detect any dirt left in your laundry during a cycle before adding a second dose of detergent if necessary. The machine also calculates the correct laundry time, water and energy, adding the precise amount of detergent and internal test shows it may help to reduce up to 60% the amount of detergent used for a 2 kg load.

PROTECT AND CARE FOR WOOL

The Wool Care programme is suited for machine washable wool cleaning and drying without shrinking.

NO VISIBLE DETERGENT RESIDUE*

With the UltraMix technology, detergent and softener are thoroughly dissolved and activated before they enter the drum. This helps to ensures that your clothes are cleaned with no visible detergent residue at the end of the cycle.**Tested on a 3kg mixed load, using recommended powder detergent dosage. Results may vary depending on load size, detergent type and water hardness.

RIGHT SETTINGS TO HELP SAVE

Select the cycle and tune the intensity according to your needs. Based on your choice, SmartSelect will provide feedback, adjusting the programme length and temperature, guiding you to save energy, time and water.

SANITISE YOUR CLOTHES*

The Sanitise Program, verified by Swissatest, combines a wash cycle and steam at above 60°C to remove more than 99.99% of common bacteria and viruses*. Pollen and allergens are also reduced for hygienically clean clothes after every wash.* Tested for Candida albicans, MS2 Bacteriophage and Escherichia coli in external test performed by Swissatest Testmaterialien AG in 2021 ("Test Report No. 202120117, 20232072").

DEDICATED CARE FOR DELICATES

DelicatesPlus helps extend the lifetime of your favourite clothes with optimised drum and washing motion and speed. DelicatesPlus is designed to offer gentle care for all your delicates, including premium cottons helping them last by reducing wear and tear from washing over time.

REFRESH WITHOUT WASHING

Quickly revitalise your garments and smooth out creases in under 30 minutes with the VapourRefresh cycle. Your clothes will emerge refreshed, with less wrinkles compared to air drying.**Less wrinkles vs. air drying - tested and certified by THTI

PERFECT WASHING WITH SENSORS

Wash out stubborn stains without the need for pre-treatments. SensorWash technology uses unique sensors to automatically detect dirt and soil levels and then adjusts the cycle duration accordingly. Can help to remove up to 53 different visible stains including oil, ketchup, fruits puree and pizza.**Tested on 5kg load stains from food, household and personal products using Cotton 40°C cycle + StainPro option. Results may vary depending on factors such as models, load size, type and duration of soiling, detergent type and water hardness.

Specifications

PRODUCT PROFILE

Washing Machine Type	Front load washing machine
Domestic warranty details (yrs)	2
Front Loader Type	Front Loader
Design family (eline)	UC3
Capacity (Kg)	12
Frontloader Wash system	UltraMix,IntelliDose

DIMENSIONS

PRODUCT

Total height (mm)	850
Total width (mm)	600
Total depth (mm)	659

BUTTON FUNCTION

Dimension Button Functions	power/on/off,Start/Pause,Child Lock,Remote,Finish In,Favourite programs,SmartSelect,Confirm Start
Reminder/ Indicators	end of cycle,Confirm Start

ENERGY FOR WASHING

Water Efficiency Star Rating	4.5
WELS Registration Number	C02380
Water Consumption (litres)	104
Energy Efficiency Star Rating	5
Energy Consumption Warm (KWhr/yr)	292

WASH PROGRAMS

Number of Programs	17
Frontloader Wash programs	spin,Bedding,Cotton,Wool,Vapour Refresh,Rinse & Spin,Quick 15,Eco Cotton,DelicatesPlus,Sanitise,IntelliQuick,Sports,Baby Care,easy iron,Tub clean,Towels,Denim
Wash options	wash temperatures,wash choice selection,Prewash,Quick wash,Extra Rinse,Favourite,Delay End,Start/Pause,Add Clothes,Hygienic Care
Dispenser	detergent dispenser,AutoDose system
Wash and Dry Programs	N/A
Wash and Dry options	N/A

CONTROLS

Type of controls	SmartSelect,electronic rotary,Touch button
Control panel colour	grey
Functions available	Child Lock,APP notification,Spinning and draining phase indicator,Wi-Fi connection indicator,internal drum light
Type of display	LED

BOWL

Drum material	stainless steel

DOOR

door lock	Yes

CABINET

Cabinet Colour	grey
Cabinet material	painted galvanized steel

TECHNICAL

Water pressure requirements min	005

TECHNICAL

Water pressure requirements max	08
Water supply	cold
Motor type	inverter
Maximum spin speed	1400
Variable spin speed	Yes

SHIPPING

Shipping Weight (Kg)	87.5
Pack Dimensions Height (mm)	870
Pack Dimension Width (mm)	635
Pack Dimension Depth (mm)	698

STUFFING QUANTITIES

40ft HC	150

Dimensions

Model:
EWF1242R9SCS

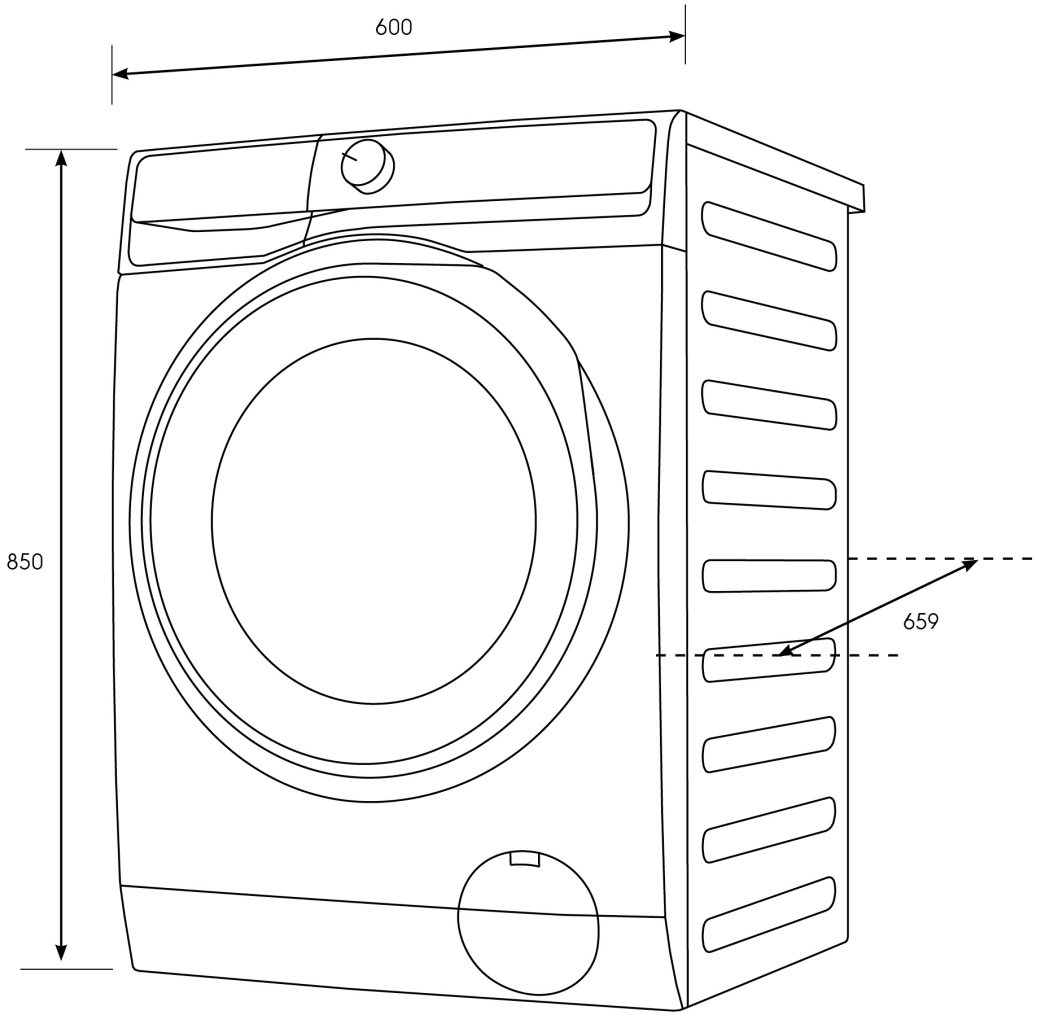

© 2025 Electrolux S.E.A PTE. LTD. ELX_IM_Diag_EWF1242R9SCS_ANZ_EN_Jun25

Terms and Conditions

IMPORTANT

This is a guide of product dimensions only. For complete installation instructions, refer to the manual provided with product.

PRODUCT INFORMATION

The descriptors and illustrations in this publication apply to the specific products and models described as at the date of issue. Under our policy of continuous productdevelopment, product specifications may change without notice. Prospective purchasers should therefore check with their retailer to ensure this publication correctly describes theproducts that are being offered for sale. All information supplied is to be used for general reference purposes only and is on the understanding that Electrolux Home Products PtyLtd (Australia) and Electrolux (NZ) Ltd (New Zealand) will not be liable for any loss, liability or damage of whatever kind arising as a result of reliance on such information. Colours ofproducts illustrated are as close as printing limitations allow. Electrolux will at all times comply with its obligations pursuant to law including Trade Practices (Australian Consumer Law) Act and Regulations.

WARRANTY

This warranty only applies to Appliances purchased and used in Australia or New Zealand and used in normal domestic applications and is in addition to (and does not exclude, restrict, or modify in any way) any non-excludable statutory warranties in Australia or New Zealand. All warranties are subject to the conditions set out in the warranty card accompanying the product when purchased.

ELECTROLUX HOME PRODUCTS AUSTRALIA
telephone: 1300 363 640
fax: 1800 350 067
email: customercare@electrolux.com.au
web: www.electrolux.com.au

ELECTROLUX HOME PRODUCTS NEW ZEALAND
telephone: 09 573 2230
fax: 09 573 2221
email: customercare@electrolux.co.nz
web: www.electrolux.co.nz