Wash a 8kg load in just 45min thanks to the Full Wash 45 cycle. Its UltraMix technology thoroughly dissolves detergent, preventing visible residue on your clothes. Enjoy its SmartSelect Ui, allowing you to adjust washing based on your needs and guiding you save energy, time and water.



Product Details

FEATURES

Full Wash 45
Experience fast and energy efficient full-load cleaning at 30°C in just 45 mins.*Comparing Full Wash 45 program with longer Cotton 40°C program.

UltraMix
UltraMix technology thoroughly dissolves detergent, preventing visible residue on your clothes.

DelicatePlus
DelicatesPlus provides gentle care for all your delicates, helping them last for longer.

BENEFITS

FULL LOAD WASH IN 45 MINS
Experience fast, efficient full-load cleaning with UltimateCare Full Wash 45. Suited for mixed fabrics, coloured cottons, and daily wear with light soil levels. Full Wash 45 cleans at 30°C in just 45 minutes. Fast and energy efficient while providing better care for your clothes at lower temperature.*Comparing Full Wash 45 program with longer Cotton 40°C program.

NO VISIBLE DETERGENT RESIDUE*
With the UltraMix technology, detergent and softener are thoroughly dissolved and activated before they enter the drum. This helps to ensures that your clothes are cleaned with no visible detergent residue at the end of the cycle.**Tested on a 3kg mixed load, using recommended powder detergent dosage. Results may vary depending on load size, detergent type and water hardness.

DEDICATED CARE FOR DELICATES
DelicatesPlus helps extend the lifetime of your favourite clothes with optimised drum and washing motion and speed. DelicatesPlus is designed to offer gentle care for all your delicates, including premium cottons helping them last by reducing wear and tear from washing over time.

SANITISE YOUR CLOTHES*
The Sanitise Program, verified by Swissatest, combines a wash cycle and steam at above 60°C to remove more than 99.99% of common bacteria and viruses*. Pollen and allergens are also reduced for hygienically clean clothes after every wash.* Tested for Candida albicans, MS2 Bacteriophage and Escherichia coli in external test performed by Swissatest Testmaterialien AG in 2021 ("Test Report No. 202120117, 20232072").

RIGHT SETTINGS TO HELP SAVE
Select the cycle and tune the intensity according to your needs. Based on your choice, SmartSelect will provide feedback, adjusting the programme length and temperature, guiding you to save energy, time and water.

Specifications

PRODUCT PROFILE

Washing Machine Type	Front load washing machine
Domestic warranty details (yrs)	2
Front Loader Type	Front Loader
Design family (eline)	UC3
Capacity (Kg)	8
Frontloader Wash system	UltraMix

DIMENSIONS

PRODUCT

Total height (mm)	850
Total width (mm)	600
Total depth (mm)	659

BUTTON FUNCTION

Dimension Button Functions	power/on/off,Start/Pause,Child Lock,Finish In,Hygienic Care,Prewash,Spin,Temp,Wash,Confirm Start
Reminder/ Indicators	end of cycle,Confirm Start

ENERGY FOR WASHING

Water Efficiency Star Rating	4.5
WELS Registration Number	C02379
Water Consumption (litres)	68
Energy Star Rating New	4
Energy Consumption Warm (KWhr/yr)	274

WASH PROGRAMS

Number of Programs	12
Frontloader Wash programs	spin,Bedding,Cotton,Tub clean,Rinse & Spin,Sports,Quick 15,Baby Care,Full Wash 45,Sanitise,Eco Cotton,DelicatesPlus
Wash options	Prewash,Child Lock,Hygienic Care,wash choice selection,deep rinse,Save Favourite,Start/Pause,Add Clothes,Temperature,Spin Option
Dispenser	detergent dispenser
Wash and Dry Programs	N/A
Wash and Dry options	N/A

CONTROLS

Type of controls	electronic rotary,Touch button,SmartSelect
Control panel colour	grey
Functions available	wash cycle progress indicator,door lock indicator,time remaining,favourite program,prewash,quick wash/time save,extra rinse,economy option,child lock indicator,spin speed indicator,delay end,pause,Temperature,Time save,UltraMix
Type of display	LED

BOWL

Drum material	stainless steel
Easy access angled drum	Yes

DOOR

Door Colour	Dark Onyx
door lock	Yes

CABINET

Cabinet Colour	white

TECHNICAL

Water pressure requirements min	005

CABINET

Cabinet material	painted galvanized steel

TECHNICAL

Water pressure requirements max	08
Water supply	cold
Motor type	inverter
Rinsing system	extra rinse
Maximum spin speed	1200
Variable spin speed	Yes

SHIPPING

Shipping Weight (Kg)	76
Pack Dimensions Height (mm)	870
Pack Dimension Width (mm)	635
Pack Dimension Depth (mm)	698

STUFFING QUANTITIES

40ft HC	150

Dimensions

Model:
EWF8023P5WCS

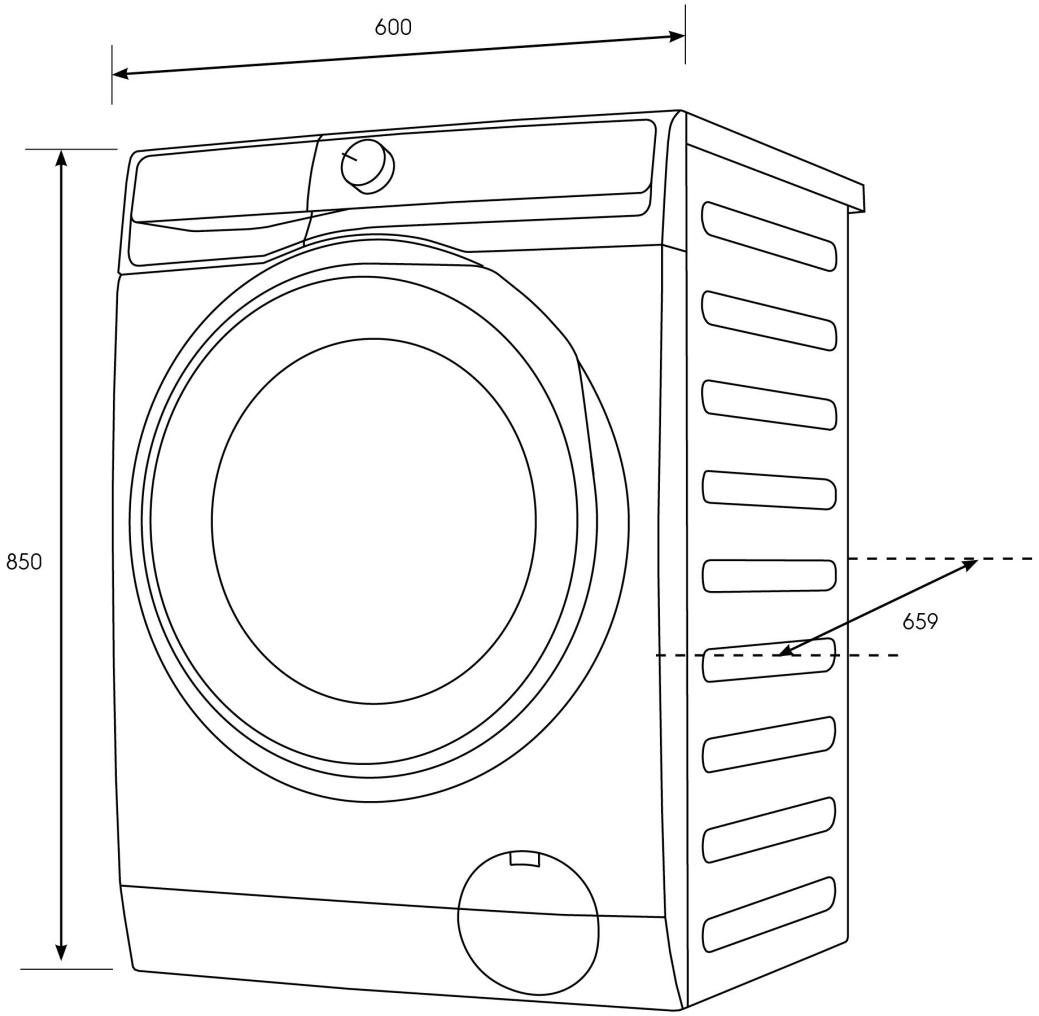

© 2025 Electrolux S.E.A PTE. LTD. ELX_IM_Diag_EWF8023P5WCS_ANZ_EN_Jun25

Terms and Conditions

IMPORTANT

This is a guide of product dimensions only. For complete installation instructions, refer to the manual provided with product.

PRODUCT INFORMATION

The descriptors and illustrations in this publication apply to the specific products and models described as at the date of issue. Under our policy of continuous productdevelopment, product specifications may change without notice. Prospective purchasers should therefore check with their retailer to ensure this publication correctly describes theproducts that are being offered for sale. All information supplied is to be used for general reference purposes only and is on the understanding that Electrolux Home Products PtyLtd (Australia) and Electrolux (NZ) Ltd (New Zealand) will not be liable for any loss, liability or damage of whatever kind arising as a result of reliance on such information. Colours ofproducts illustrated are as close as printing limitations allow. Electrolux will at all times comply with its obligations pursuant to law including Trade Practices (Australian Consumer Law) Act and Regulations.

WARRANTY

This warranty only applies to Appliances purchased and used in Australia or New Zealand and used in normal domestic applications and is in addition to (and does not exclude, restrict, or modify in any way) any non-excludable statutory warranties in Australia or New Zealand. All warranties are subject to the conditions set out in the warranty card accompanying the product when purchased.

ELECTROLUX HOME PRODUCTS AUSTRALIA
telephone: 1300 363 640
fax: 1800 350 067
email: customercare@electrolux.com.au
web: www.electrolux.com.au

ELECTROLUX HOME PRODUCTS NEW ZEALAND
telephone: 09 573 2230
fax: 09 573 2221
email: customercare@electrolux.co.nz
web: www.electrolux.co.nz