12KG wash, 8KG dryer with IntelliDose, delivering the optimal detergent dose for every load. Wash a 12KG load in 45min thanks to IntelliQuick, using load sensors to determine the quickest program. Also features SensorWash, CareDrum, Wash & Dry a Duvet in 60min. UltraMix technology that prevents visible detergent residue.



Product Details

FEATURES

UltraMix
UltraMix technology thoroughly dissolves detergent, preventing visible residue on your clothes.

Sanitise
Sanitise program wash and steam above 60°C to remove more than 99.99% of common bacteria & viruses.*** Tested for Candida albicans, MS2 Bacteriophage and Escherichia coli in external test performed by Swissatest Testmaterialien AG in 2021 ("Test Report No. 202120117, 20232072").

DelicatePlus
DelicatesPlus provides gentle care for all your delicates, helping them last for longer.

DuvetCare 60
DuvetCare 60 uses heated vapour to treat and dry your king-sized duvets* or comforters in 60 mins.**King-sized duvets only suitable for in 12/13 kg machines. Smaller sized duvets suitable in all machines. **Compared to a normal wash and dry cycle.

CareDrum
CareDrum, with its unique water-cushion technology, gently cares and protects your laundry.

SensorWash
SensorWash sensors help to remove up to 53 different stains without pre-treatment or pre-washing.* *Tested on 5kg load stains from food, household and personal products using Cotton 40°C cycle + StainPro option. Results may vary depending on factors such as models, load size, type and duration of soiling, detergent type and water hardness.

IntelliQuick
IntelliQuick selects the best suited programme based on your laundry load size for precise care.

IntelliDose
IntelliDose uses intelligent sensors to deliver the optimal detergent dose and wash for every load.

BENEFITS

NO VISIBLE DETERGENT RESIDUE*

With the UltraMix technology, detergent and softener are thoroughly dissolved and activated before they enter the drum. This helps to ensures that your clothes are cleaned with no visible detergent residue at the end of the cycle.**Tested on a 3kg mixed load, using recommended powder detergent dosage. Results may vary depending on load size, detergent type and water hardness.

SANITISE YOUR CLOTHES*

The Sanitise Program, verified by Swissatest, combines a wash cycle and steam at above 60°C to remove more than 99.99% of common bacteria and viruses*. Pollen and allergens are also reduced for hygienically clean clothes after every wash.* Tested for Candida albicans, MS2 Bacteriophage and Escherichia coli in external test performed by Swissatest Testmaterialien AG in 2021 ("Test Report No. 202120117, 20232072").

TOTAL DUVET CARE IN 60 MINS

DuvetCare 60 uses heated vapour to treat and dry your king-sized duvets* or comforters in just 60 minutes. The heated vapour helps reduce water and energy consumption** while removing odours like sweat and reducing dust mites in one simple programme. *King-sized duvets are only suitable for 12/13 kg machines. Smaller*sized duvets suitable for all machines. **Compared to a normal wash and dry cycle.

GENTLE CARE FOR YOUR LAUNDRY

CareDrum lets garments glide smoothly due to its elevated cushion-like drum pattern and lifter paddle. Thanks to the unique pattern of the drum, it is gentle on your clothes.

PERFECT WASHING WITH SENSORS

Wash out stubborn stains without the need for pre-treatments. SensorWash technology uses unique sensors to automatically detect dirt and soil levels and then adjusts the cycle duration accordingly. Can help to remove up to 53 different visible stains including oil, ketchup, fruits puree and pizza.**Tested on 5kg load stains from food, household and personal products using Cotton 40°C cycle + StainPro option. Results may vary depending on factors such as models, load size, type and duration of soiling, detergent type and water hardness.

QUICK 12KG WASH IN 45 MINS

New IntelliQuick smartly selects the quickest programme based on your laundry load for precise care and cleans a full load in 45 minutes. This removes any pre-laundry stress by providing efficient cleaning with the precise level of care for your clothes, making them last longer without additional energy or water usage.

PRECISE DOSE, UP TO 60% LESS DETERGENT

The UltimateCare 900 IntelliDose Machine uses sensors to deliver the optimal detergent dose for every load. With SensorWash, sensors detect any dirt left in your laundry during a cycle before adding a second dose of detergent if necessary. The machine also calculates the correct laundry time, water and energy, adding the precise amount of detergent and internal test shows it may help to reduce up to 60% the amount of detergent used for a 2 kg load.

Specifications

PRODUCT PROFILE

Washing Machine Type	Front load washing machine
Domestic warranty details (yrs)	2
Front Loader Type	Front Loader
Design family (eline)	UC3
Capacity (Kg)	12
Frontloader Wash system	UltraMix,IntelliDose

DIMENSIONS

PRODUCT

Total height (mm)	850
Total width (mm)	600
Total depth (mm)	659

DRYER

Capacity (Kg)	8
Dryer Lint filter position	front pocket

BUTTON FUNCTION

Dimension Button Functions	power/on/off,Start /Pause,Refresh,Dryness Level,Remote,Time Dry
Reminder/ Indicators	end of cycle

DRYING PROGRAMS

Drying Programs	timed programs

ENERGY FOR WASHING

Water Efficiency Star Rating	4.5

Degree of dryness	extra,cupboard,iron dry
Venting	directional front vent grille

ENERGY FOR WASHING

Water Consumption (litres)	102
Energy Efficiency Star Rating	5
Energy Consumption Warm (KWhr/yr)	281

ENERGY FOR DRYING

Energy Efficiency Star Rating	2
Energy Consumption (KWhr/yr)	355

WASH PROGRAMS

Number of Programs	17
Frontloader Wash programs	spin,Bedding,Cotton,Vapour Refresh,Rinse & Spin,Sports,Quick 15,Baby Care,Eco Cotton,DelicatesPlus,Sanitise,IntelliQuick,Towels,WashDry 60,DuvetCare 60,Denim,Wool
Wash options	Remote Start,Finish In,Wash Mode
Dispenser	detergent dispenser
Wash and Dry Programs	Cottons,Eco Cotton,DuvetCare 60,Spin,Wool,IntelliQuick,WashDry 60
Wash and Dry options	Time Dry,Dryness Level

CONTROLS

BOWL

CONTROLS

Type of controls	Touch button
Control panel colour	grey
Functions available	wash cycle progress indicator,maximum load capacity indicator,load weight,Temperature,Steam,Dryness level,UltraMix,SensorWash,Vapour,Child Lock,Wash/Dry Mode,Finish In indicator,APP notification,Spinning and draining phase indicator,Drying phase indicator,Wi-Fi connection indicator,Hygienic Care
Type of display	LCD

BOWL

Drum material	stainless steel

DOOR

Door Colour	Dark Onyx
door lock	Yes

CABINET

Cabinet Colour	Dark Onyx
Cabinet material	painted galvanized steel

TECHNICAL

Water pressure requirements min	005
Water pressure requirements max	08

SHIPPING

Shipping Weight (Kg)	88.5
Pack Dimensions Height (mm)	870

TECHNICAL

Water supply	cold
Motor type	inverter
Rinsing system	extra rinse
Maximum spin speed	1400
Variable spin speed	Yes

SHIPPING

Pack Dimension Width (mm)	635
Pack Dimension Depth (mm)	698

STUFFING QUANTITIES

40ft HC	150

Dimensions

Model:
EWW1242R9SC

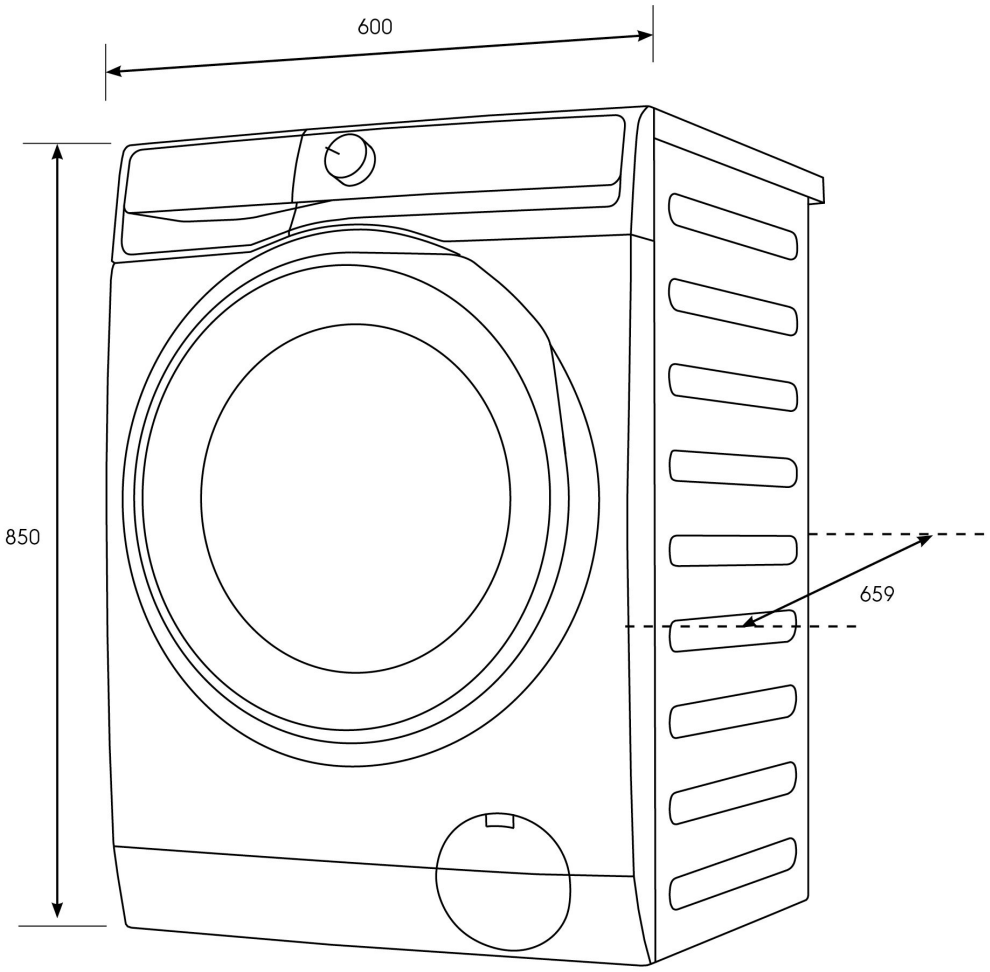

© 2024 Electrolux S.E.A PTE. LTD. ELX_IM_Diag_EWW1242R9SC_ANZ_Mar24

Terms and Conditions

IMPORTANT

This is a guide of product dimensions only. For complete installation instructions, refer to the manual provided with product.

PRODUCT INFORMATION

The descriptors and illustrations in this publication apply to the specific products and models described as at the date of issue. Under our policy of continuous productdevelopment, product specifications may change without notice. Prospective purchasers should therefore check with their retailer to ensure this publication correctly describes theproducts that are being offered for sale. All information supplied is to be used for general reference purposes only and is on the understanding that Electrolux Home Products PtyLtd (Australia) and Electrolux (NZ) Ltd (New Zealand) will not be liable for any loss, liability or damage of whatever kind arising as a result of reliance on such information. Colours ofproducts illustrated are as close as printing limitations allow. Electrolux will at all times comply with its obligations pursuant to law including Trade Practices (Australian Consumer Law) Act and Regulations.

WARRANTY

This warranty only applies to Appliances purchased and used in Australia or New Zealand and used in normal domestic applications and is in addition to (and does not exclude, restrict, or modify in any way) any non-excludable statutory warranties in Australia or New Zealand. All warranties are subject to the conditions set out in the warranty card accompanying the product when purchased.

ELECTROLUX HOME PRODUCTS AUSTRALIA

telephone: 1300 363 640
fax: 1800 350 067
email: customercare@electrolux.com.au
web: www.electrolux.com.au

ELECTROLUX HOME PRODUCTS NEW ZEALAND

telephone: 09 573 2230
fax: 09 573 2221
email: customercare@electrolux.co.nz
web: www.electrolux.co.nz