9kg/5kg washer dryer, with 5 star energy and 4.5 star WELS rating. The washer dryer features the latest SensorWash technology, UltraMix System, Woolmark® Blue Accreditation (wash) and Vapour Refresh options



Product Details

FEATURES

High performance 1400 rpm spin cycle

Gentle Drum
More smaller holes allow water to pass in and out of the drum quickly, while also helping to reduce pulling of your clothes during high-speed spinning.

Extra-Large Door Opening

Add Clothes
With our Add Clothes function, you can quickly add those forgotten items. It can only be used when the water level is below the door and on programs where the water temperature is less than 60 degrees Celsius.

5 Energy Stars rated

Save your favourite program

Woolmark Blue Certified

EcoInverter
The ecoinverter motor delivers quieter operation, improvements in energy efficiency and improved durability, backed by a 10 year parts & labour inverter motor warranty ensuring peace of mind.

BENEFITS

Intuitive and intelligent
Keep colours bright, whites startling and blacks dark. Smart sensors automatically detect the soil and detergent levels to adjust the washing time for optimal, energy-efficient results that reduces unnecessary wear on fabrics.

Extra-Large Door Opening
The extra-large door opening was designed to make loading and unloading your machine a breeze. With easy access to the inside drum, you will enjoy better visibility so you never miss those smaller items.

Quietly efficient
Reduce your energy needs by up to 50% with a powerful and reliable EcoInverter motor. With the 10 year parts and labour inverter motor warranty your Electrolux will deliver, wash after wash, year after year. *vs Electrolux non inverter motors

Hand it to us
You can safely trust your Electrolux to treat your delicate wool garments with utmost care. Our wool cycle is proven to be gentle enough even for your hand wash only woollens, keeping them as fresh and lovely as they felt when you first put them on.

Hygienic clean. Vapour care
Electrolux front load washers with vapour option removes up to 99.2% of Der f1 (dust mite) and Fel d1 (cat allergen) and up to 99.9% of Staphylococcus aureus and Klebsiella pneumonia during a 40C cottons wash.

Deeper clean
Say goodbye to detergent or soil residue on your freshly washed garments. UltraMix ensures detergent is fully dissolved before it reaches your fabrics for 40% less colour fading after 52 washes, even using cold water.

Specifications

PRODUCT PROFILE

Washing Machine Type	Front load washing machine
Domestic warranty details (yrs)	2
Front Loader Type	combination front loader and dryer
Capacity (Kg)	9
Frontloader Wash system	UltraMix,SensorWash

DIMENSIONS

PRODUCT

Total height (mm)	850
Total width (mm)	600
Total depth (mm)	659

DRYER

Capacity (Kg)	5

DRYING PROGRAMS

Drying Programs	auto sensing,WashDry 60,timed programs

ENERGY FOR WASHING

Water Efficiency Star Rating	4.5
Water Consumption (litres)	76

ENERGY FOR DRYING

Energy Efficiency Star Rating	3
Energy Consumption (KWhr/yr)	191

ENERGY FOR WASHING

Energy Efficiency Star Rating	5
Energy Consumption Warm (KWhr/yr)	214
Noise level dBA	49

ENERGY FOR DRYING

Water Consumption (litres)	46

WASH PROGRAMS

Number of Programs	15
Frontloader Wash programs	Delicate,Bedding,spin,Mixed,Energy Saver,Cotton,Tub clean,Wool,Daily 60,Vapour Refresh,Rinse & Spin,Sports,Quick 15,Favourite
Wash options	wash temperatures,Prewash,vapour,spin selection,Time Manager,WashDry 60,Delay Start,SensorWash,Save Favourite,Child Lock
Dispenser	pre-wash dispenser,Powder or liquid detergent dispenser,Fabric softener dispenser
Wash and Dry Programs	WashDry 60
Wash and Dry options	Time Dry,Dryness Level

CONTROLS

Type of controls	rotary,Touch button
Control panel colour	blue
Functions available	prewash,Save Favourite,delay start,wash cycle progress indicator,Dryness level,SensorWash,Vapour,Child Lock,Wash/Dry Mode
Type of display	LED

BOWL

Drum material	stainless steel

DOOR

Reversible	No
door lock	Yes

CABINET

Cabinet Colour	white
Cabinet material	painted galvanized steel

TECHNICAL

Water pressure requirements min	50
Water pressure requirements max	800
Water supply	cold
Inlet hose length	1350
Inlet hose extension avail as spare part	Yes
Drain hose length	1450
Drain hose extension avail as spare part	Yes
Service cord length	1500
Motor type	Ecoinverter
Maximum spin speed	1400
Variable spin speed	Yes

TECHNICAL

Number of spin speeds	6

SHIPPING

Shipping Volume (m3)	38.6
Shipping Weight (Kg)	81.5
Pack Dimensions Height (mm)	870
Pack Dimension Width (mm)	635
Pack Dimension Depth (mm)	698

STUFFING QUANTITIES

40ft HC	150

Dimensions

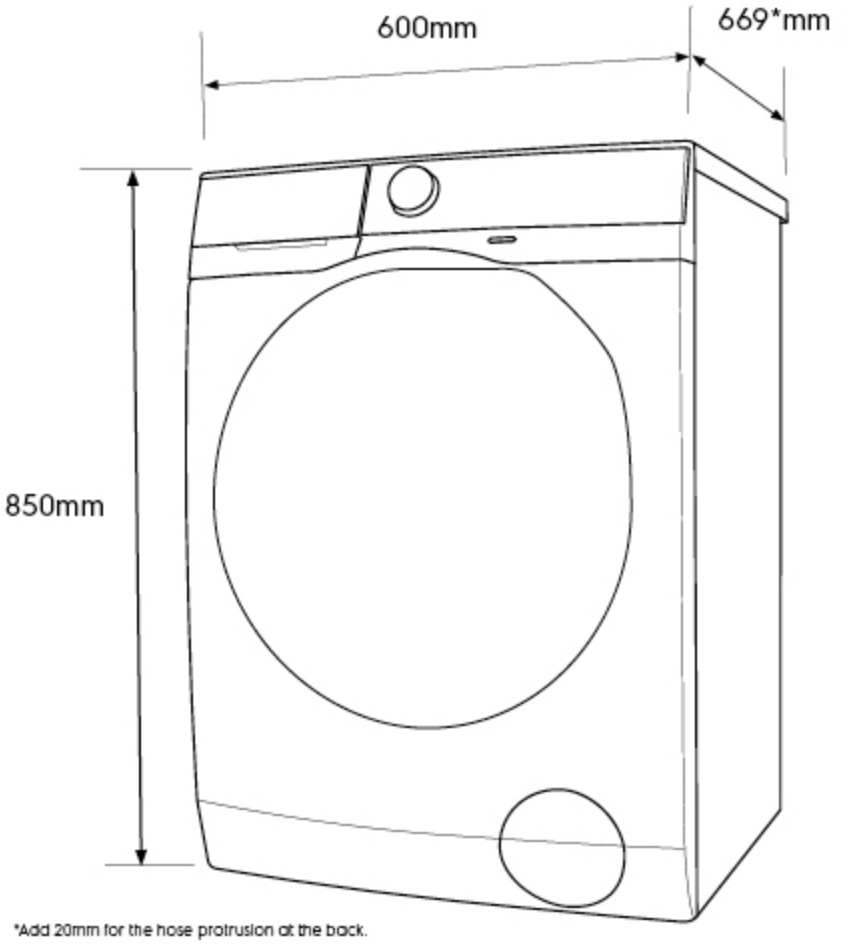

*Add 20mm for the hose protrusion at the back.

IMPORTANT
This is a guide of product dimensions only. For complete installation instructions, refer to the manual provided with product.

© 2019 Electrolux Home Products Pty Ltd. EDIM_WasherDryer_1cm19

Terms and Conditions

IMPORTANT

This is a guide of product dimensions only. For complete installation instructions, refer to the manual provided with product.

PRODUCT INFORMATION

The descriptors and illustrations in this publication apply to the specific products and models described as at the date of issue. Under our policy of continuous productdevelopment, product specifications may change without notice. Prospective purchasers should therefore check with their retailer to ensure this publication correctly describes theproducts that are being offered for sale. All information supplied is to be used for general reference purposes only and is on the understanding that Electrolux Home Products PtyLtd (Australia) and Electrolux (NZ) Ltd (New Zealand) will not be liable for any loss, liability or damage of whatever kind arising as a result of reliance on such information. Colours ofproducts illustrated are as close as printing limitations allow. Electrolux will at all times comply with its obligations pursuant to law including Trade Practices (Australian Consumer Law) Act and Regulations.

WARRANTY

This warranty only applies to Appliances purchased and used in Australia or New Zealand and used in normal domestic applications and is in addition to (and does not exclude, restrict, or modify in any way) any non-excludable statutory warranties in Australia or New Zealand. All warranties are subject to the conditions set out in the warranty card accompanying the product when purchased.

ELECTROLUX HOME PRODUCTS AUSTRALIA
telephone: 1300 363 640
fax: 1800 350 067
email: customercare@electrolux.com.au
web: www.electrolux.com.au

ELECTROLUX HOME PRODUCTS NEW ZEALAND
telephone: 09 573 2230
fax: 09 573 2221
email: customercare@electrolux.co.nz
web: www.electrolux.co.nz