60cm white electric freestanding oven, with multi-function 8 fan forced oven, warming drawer and a 4 zone ceramic cooktop with dual zone and hot surface indicator.

Product Details

FEATURES

Electric fan forced oven	Multifunction oven	Easy reach rear controls	Easy clean formed shelf supports
Handy warming drawer	80L gross capacity oven	Ceramic cooktop	Dual Zone
Hot surface indicator	In-built power points		

BENEFITS

Fan forced for even cooking
When it comes to cooking, one of the biggest is even heat distribution over your dishes. By using fan forced cooking you are able to create an even cooking result.

Handy warming drawer
Extra storage always comes in handy, so with a clever storage compartment you can easily stow away any extra pots and pans. What's more this can also be used as a warming drawer, keeping dishes or plates warm before serving.

Clean your shelf supports with ease
When it comes to cleaning your oven we want it to be fuss free, given the design of our shelf supports you can clean the sides of your oven with ease as there are no racks to be removed.

More versatility with variable zones
With Dual Zone functionality you are able to adjust your cooking surface to suit your pot or pan size with ease.

Rear control for safety
Our rear control is easy to reach and angled to keep your cookers control away from smaller hands.

Specifications

PRODUCT PROFILE

Domestic warranty details (yrs)	2
Oven fuel	electric
Materials/Colour	white enamel
Controls of Oven	control knob
Cooling fan	No
Plinth colour (kickboard)	white
Front/rear controls	rear
Warming drawer	Yes

DIMENSIONS

PRODUCT DIMENSION

Total height (mm)	1150
Total width (mm)	596
Total depth (mm)	620

MAIN OVEN

Gross capacity litres	80
Useable capacity litres	74
Oven function	multifunction
Number of functions	8

ELECTRICAL CONNECTION

Connected load KW	11.8
Type of connection	hardwired

MAIN OVEN

Oven liner	enamel
Lights	1
Layers of glass in door	2
Shelf support	easy clean formed shelf supports
Number of shelves	2
Number of shelf positions	5
Closed door grilling	No

SHIPPING

Shipping Volume (m3)	0.569
Shipping Weight (Kg)	50
Pack Dimensions Height (mm)	1235
Pack Dimension Width (mm)	635
Pack Dimension Depth (mm)	726

STUFFING QUANTITIES

40ft	96
40ft HC	120

COOKTOP (IF APPLICABLE)

PRODUCT PROFILE

Cook top type	ceramic
Materials/Colour	black ceramic glass
Knob finish	white

ELEMENTS/BURNERS

Cooking zones	4
Pot sensors	No
Boost function	No

LEFT FRONT ZONE

Left front Watts	1000
Left front number of cooking zones	1

LEFT REAR ZONE

Left rear zone	ceramic
Left rear watts	1200
Left rear number of cooking zones	1

RIGHT FRONT ZONE

Right front Watts	1200
Right front number of cooking zones	1

RIGHT REAR ZONE

Right rear watts	1800
Right rear number of cooking zones	1

Dimensions

60cm Rear Control Freestanding Cooker, Warming Drawer

WLE645WCB

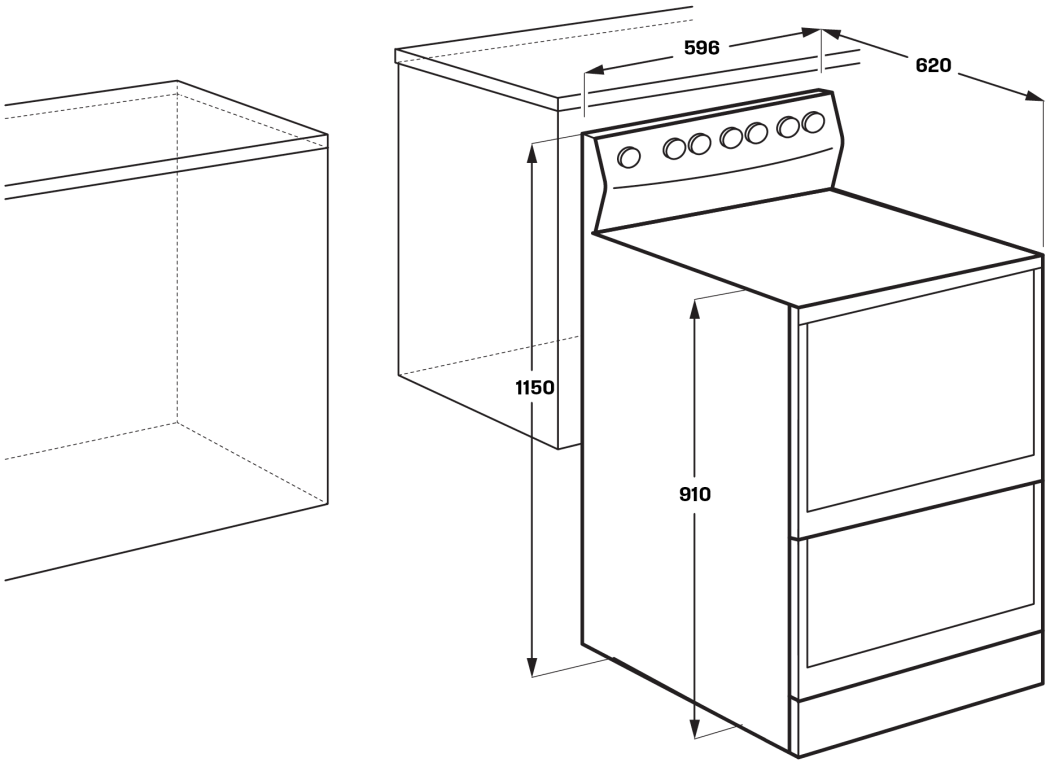

IMPORTANT

These dimensions are a guide only. All measurements are in millimetres (mm). For complete installation instructions, refer to the manual provided with product.

Terms and Conditions

IMPORTANT

This is a guide of product dimensions only. For complete installation instructions, refer to the manual provided with product.

PRODUCT INFORMATION

The descriptors and illustrations in this publication apply to the specific products and models described as at the date of issue. Under our policy of continuous productdevelopment, product specifications may change without notice. Prospective purchasers should therefore check with their retailer to ensure this publication correctly describes theproducts that are being offered for sale. All information supplied is to be used for general reference purposes only and is on the understanding that Electrolux Home Products PtyLtd (Australia) and Electrolux (NZ) Ltd (New Zealand) will not be liable for any loss, liability or damage of whatever kind arising as a result of reliance on such information. Colours ofproducts illustrated are as close as printing limitations allow. Electrolux will at all times comply with its obligations pursuant to law including Trade Practices (Australian Consumer Law) Act and Regulations.

WARRANTY

This warranty only applies to Appliances purchased and used in Australia or New Zealand and used in normal domestic applications and is in addition to (and does not exclude, restrict, or modify in any way) any non-excludable statutory warranties in Australia or New Zealand. All warranties are subject to the conditions set out in the warranty card accompanying the product when purchased.

ELECTROLUX HOME PRODUCTS AUSTRALIA

telephone: 1300 363 640
fax: 1800 350 067
email: customercare@electrolux.com.au
web: www.electrolux.com.au

ELECTROLUX HOME PRODUCTS NEW ZEALAND

telephone: 09 573 2230
fax: 09 573 2221
email: customercare@electrolux.co.nz
web: www.electrolux.co.nz