**This stainless steel and silver freestanding dishwasher is equipped with a rotary dial and 5 wash programs, including 30 minutes quick wash and water saving ECO wash. Enjoy the added benefits of a half load wash and stable support for tall glasses.**

# Product Details

## FEATURES

| | | | |
|---|---|---|---|
| 13 place settings | Wash programs - 5 | Fast wash programs | Time Save program |
| Half load option | Wash progress indicator | Adjustable upper basket | Bottom basket with fold down racks |
| Durable stainless steel tub | Water safety system | | |

## BENEFITS

Simple to use controls
The well-designed rotary dial saves time and reduces confusion. Simply rotate it to select your desired program.

Five wash programs
There's a program to suit your requirements, giving you more flexibility to choose what, when and how you wash. It includes the Fast 30 program, supporting your busy lifestyle.

Fast 30 program
Sometimes a quick wash is all you need for a smaller load. Use the Fast 30 minute program for lightly soiled dishes at breakfast, lunch or dinner and then just get on with your day.

Saves water
With todays climate challenges, we need to do what we can to save water. That why we offer 4.5 star WELS water rated dishwashers that only use 11.8 litres of water, just a fraction of the water you will use when hand washing dishes.

Height adjustable upper basket
For added convenience, the height adjustable upper basket can be easily lifted or lowered when empty. With the flexibility to adjust the upper basket as you need, you will always find a place for everything.

# Specifications

## PRODUCT PROFILE

| | |
|---|---|
| Domestic warranty details (yrs) | 2 |
| Type of Dishwashers | freestanding |
| Place settings | 13 |
| Drying system | residual drying |
| Number of spray arms | 2 |
| Top shower | No |

## SPECIFICATION

| | |
|---|---|
| Water Efficiency Star Rating | 4.5 |
| WELS Registration Number | D02348 |
| Water consumption (litres) | 11.8 |
| Energy Efficiency Star Rating | 3 |
| Energy consumption cold water (kWhr/yr) | 295 |
| Noise level dBA | 49 |
| Water supply | cold or hot (maximum 60°C) |
| Basket colour | grey |
| Service cord length | 1.8 |

## DIMENSIONS

| | |
|---|---|
| Total height (mm) | 850 |
| Total width (mm) | 598 |

## WASH PROGRAMS

| | |
|---|---|
| Number of Programs | 5 |

## DIMENSIONS

| | |
|---|---|
| Total depth (mm) | 598 |
| Product height excluding removable worktop (mm) | 820 |
| Height adjustment (mm) | 20 |

## WASH PROGRAMS

| | |
|---|---|
| Programs | fast 30min,heavy,Eco 50°C,Time Save 50 minutes,Delicate |
| Wash option | Half Load |

## CONTROL PANEL

| | |
|---|---|
| Control panel type | rotary electronic,Push button electronic |
| Top mounted control panel | No |
| Control panel finish | white |
| Knob or button finish | white |
| Display indicators | rinse aid,end ,wash program,on/off |

## FEATURES

| | |
|---|---|
| Other Features | delay start |
| Water safety system | overfill protection,bottom catchment tray |
| Filter system | 3 stage |
| Dispenser | detergent,rinse aid |
| Number of spray levels | 2 |

## EXTERIOR

| | |
|---|---|
| Door finish | stainless steel |
| Counter-balance door | Yes |
| Side colour | grey |

## UPPER BASKET

| | |
|---|---|
| Upper basket features | adjustable top basket |
| Foldable cup shelves | 4 |

## EXTERIOR

| | |
|---|---|
| Plinth colour (kickboard) | grey |
| Removable worktop | Yes |
| Worktop colour | grey |

## LOWER BASKET

| | |
|---|---|
| Lower Basket Features | cutlery basket |
| Foldable Racks | 2 |

## HOSES

| | |
|---|---|
| Inlet hose length (metres) | 1.5 |
| Drain hose length (metres) | 1.5 |

## SHIPPING

| | |
|---|---|
| Shipping Volume (m3) | 0.38 |
| Shipping Weight (Kg) | 49 |
| Shipping Weight (Kg) | 49 |
| Pack Dimensions Height (mm) | 881 |
| Pack Dimension Width (mm) | 644 |
| Pack Dimension Depth (mm) | 661 |

## STUFFING QUANTITIES

| | |
|---|---|
| 20ft | 48 |
| 40ft | 102 |
| 40ft HC | 150 |

# Dimensions

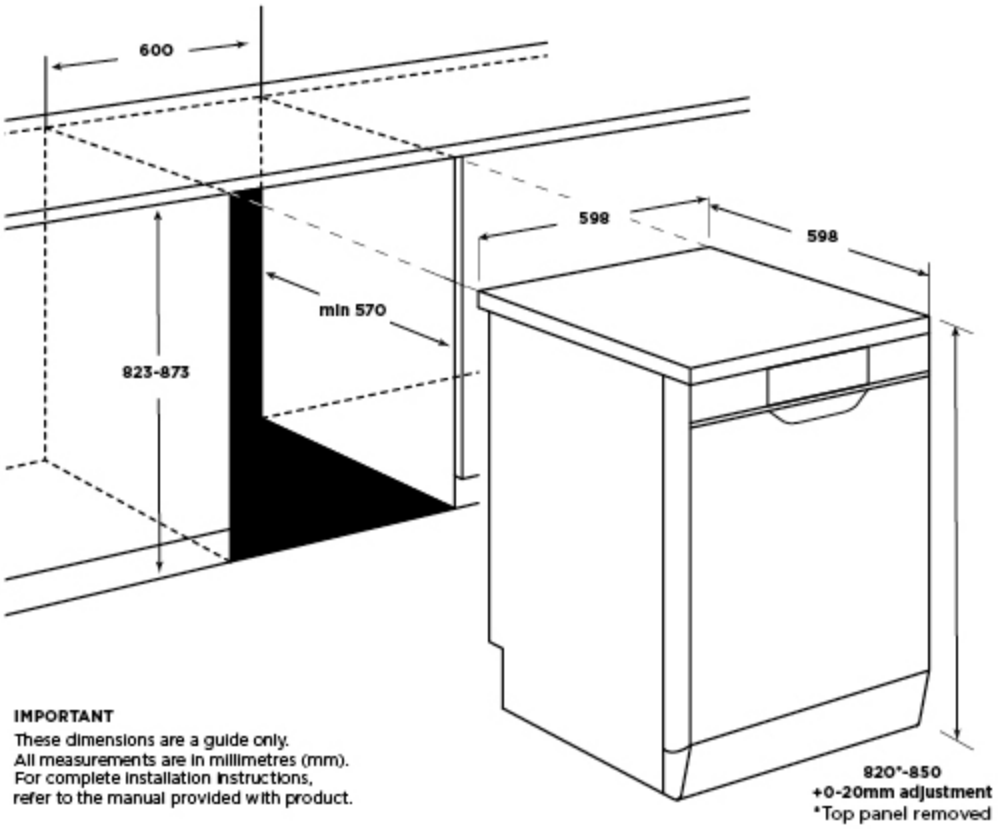


**IMPORTANT**
These dimensions are a guide only.
All measurements are in millimetres (mm).
For complete installation instructions,
refer to the manual provided with product.

# Terms and Conditions

**IMPORTANT**

This is a guide of product dimensions only. For complete installation instructions, refer to the manual provided with product.

**PRODUCT INFORMATION**

The descriptors and illustrations in this publication apply to the specific products and models described as at the date of issue. Under our policy of continuous productdevelopment, product specifications may change without notice. Prospective purchasers should therefore check with their retailer to ensure this publication correctly describes theproducts that are being offered for sale. All information supplied is to be used for general reference purposes only and is on the understanding that Electrolux Home Products PtyLtd (Australia) and Electrolux (NZ) Ltd (New Zealand) will not be liable for any loss, liability or damage of whatever kind arising as a result of reliance on such information. Colours ofproducts illustrated are as close as printing limitations allow. Electrolux will at all times comply with its obligations pursuant to law including Trade Practices (Australian Consumer Law) Act and Regulations.

**WARRANTY**

This warranty only applies to Appliances purchased and used in Australia or New Zealand and used in normal domestic applications and is in addition to (and does not exclude, restrict, or modify in any way) any non-excludable statutory warranties in Australia or New Zealand. All warranties are subject to the conditions set out in the warranty card accompanying the product when purchased.

**ELECTROLUX HOME PRODUCTS AUSTRALIA**

telephone: 1300 363 640
fax: 1800 350 067
email: customercare@electrolux.com.au
web: www.electrolux.com.au

**ELECTROLUX HOME PRODUCTS NEW ZEALAND**

telephone: 09 573 2230
fax: 09 573 2221
email: customercare@electrolux.co.nz
web: www.electrolux.co.nz