60cm freestanding dishwasher with 13 place settings, 6 wash programs, fast 30min wash, 47dB operation, half load cycle, height adjustable top basket, 3,6 or 9 hour delay start and Aquastop anti flood protection.

Product Details

FEATURES

Adjustable top basket	Fast wash cycles	Quiet operation	AquaStop antiflood protection
FlexZone	Delay Start - 3, 6 & 9 hours		

BENEFITS

Faster wash, when you need it
When it comes to doing the dishes you can choose the program that suits you, whether you have a few dishes, half a load or a full load you can choose our Fast 30, Time Saver or Half Load program.

Less dishes use less water.
Every home is different, so is every load of dishes. Our FlexZone half-load wash option saves water and energy when youve got less dishes to wash.

Anti-flood for kitchen protection
Sometimes things are out of your control, our aqua control function is designed to step in when you need it most. The anti-flood device automatically cuts off the water to avoid flooding, ensuring your kitchen is looked after.

Specifications

PRODUCT PROFILE

Domestic warranty details (yrs)	2
Type of Dishwashers	freestanding
Design family (eline)	Family Size Dishwashers
Place settings	13
Drying system	active dry
Number of spray arms	2
Top shower	Yes

SPECIFICATION

Water Efficiency Star Rating	4.5
WELS Registration Number	D02389
Water consumption (litres)	11.8
Energy Efficiency Star Rating	3
Energy consumption cold water (kWhr/yr)	295
Noise level dBA	47
Water supply	cold or hot (maximum 60°C)
Basket colour	grey
Service cord length	180

DIMENSIONS

Total height (mm)	850
Total width (mm)	598

WASH PROGRAMS

Number of Programs	6

DIMENSIONS

Total depth (mm)	598
Product height excluding removable worktop (mm)	820
Height adjustment (mm)	20

WASH PROGRAMS

Programs	fast 30min,heavy,Time Save 50 minutes,eco 50 °C,pre-wash,Delicate
Wash option	Delay End,Tablet

CONTROL PANEL

Control panel type	Push button electronic
Top mounted control panel	No
Control panel finish	black
Knob or button finish	black
Display indicators	wash progress,rinse aid,End,service code,program selected,tablet function,Delay End

FEATURES

Other Features	child lock on control panel
Water safety system	overfill protection,bottom catchment tray,anti-flood protection
Filter system	3 stage
Dispenser	detergent,rinse aid
Number of spray levels	5

EXTERIOR

Door finish	stainless steel
Counter-balance door	Yes
Side colour	grey

UPPER BASKET

Upper basket features	adjustable top basket
Foldable cup shelves	4
Foldable Racks	0

EXTERIOR

Plinth colour (kickboard)	grey
Removable worktop	Yes
Worktop colour	grey

LOWER BASKET

Lower Basket Features	Modular Cutlery Basket
Foldable Racks	2

HOSES

Inlet hose length	170
Drain hose length	180
extension hose	spare part

SHIPPING

Shipping Volume (m3)	0.3822
Shipping Weight (Kg)	49
Pack Dimensions Height (mm)	881
Pack Dimension Width (mm)	644
Pack Dimension Depth (mm)	661

STUFFING QUANTITIES

20ft	48
40ft	102
40ft HC	150

Dimensions

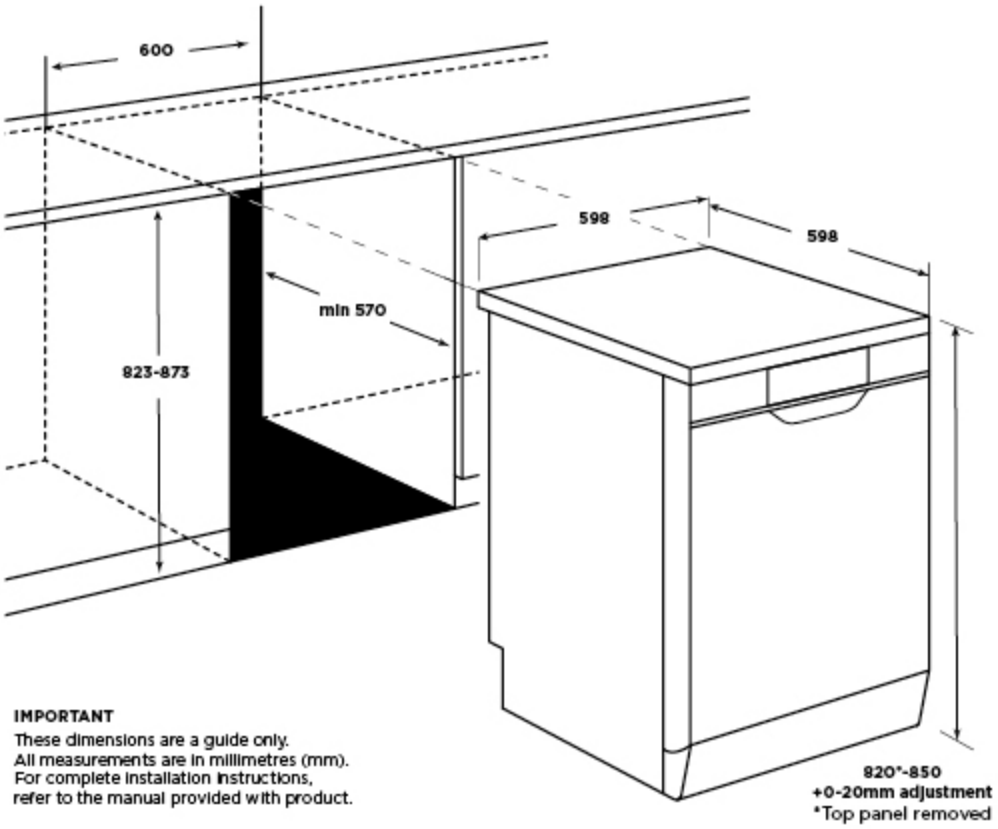

IMPORTANT
These dimensions are a guide only.
All measurements are in millimetres (mm).
For complete installation instructions,
refer to the manual provided with product.

Terms and Conditions

IMPORTANT

This is a guide of product dimensions only. For complete installation instructions, refer to the manual provided with product.

PRODUCT INFORMATION

The descriptors and illustrations in this publication apply to the specific products and models described as at the date of issue. Under our policy of continuous productdevelopment, product specifications may change without notice. Prospective purchasers should therefore check with their retailer to ensure this publication correctly describes theproducts that are being offered for sale. All information supplied is to be used for general reference purposes only and is on the understanding that Electrolux Home Products PtyLtd (Australia) and Electrolux (NZ) Ltd (New Zealand) will not be liable for any loss, liability or damage of whatever kind arising as a result of reliance on such information. Colours ofproducts illustrated are as close as printing limitations allow. Electrolux will at all times comply with its obligations pursuant to law including Trade Practices (Australian Consumer Law) Act and Regulations.

WARRANTY

This warranty only applies to Appliances purchased and used in Australia or New Zealand and used in normal domestic applications and is in addition to (and does not exclude, restrict, or modify in any way) any non-excludable statutory warranties in Australia or New Zealand. All warranties are subject to the conditions set out in the warranty card accompanying the product when purchased.

ELECTROLUX HOME PRODUCTS AUSTRALIA

telephone: 1300 363 640
fax: 1800 350 067
email: customercare@electrolux.com.au
web: www.electrolux.com.au

ELECTROLUX HOME PRODUCTS NEW ZEALAND

telephone: 09 573 2230
fax: 09 573 2221
email: customercare@electrolux.co.nz
web: www.electrolux.co.nz